Index of BT Integral Abutment Bridge Standards

Standard	Description
100-BTI	Index of BT Integral Abutment Bridge Standards
2078-BTB	"BTB" Beams - Integral Abutment Details - 0° Skew
2079-BTB	"BTB" Beams - Integral Abutment Details - (L.A.) 0°01 - 7°30 Skew
2080-BTB	"BTB" Beams - Integral Abutment Details - (L.A.) 7°31 - 15° Skew
2081-BTB	"BTB" Beams - Integral Abutment Details - (L.A.) 15°01 - 30° Skew
2082-BTB	"BTB" Beams - Integral Abutment Details - (R.A.) 0°01 - 7°30 Skew
2083-BTB	"BTB" Beams - Integral Abutment Details - (R.A.) 7°31 - 15° Skew
2084-BTB	"BTB" Beams - Integral Abutment Details - (R.A.) 15°01 - 30° Skew
2085-BTCD	"BTC" or "BTD" Beams - Integral Abutment Details - 0° Skew
2085-BTE	"BTE" Beams - Integral Abutment Details - 0° Skew
2086-BTCD	"BTC" or "BTD" Beams - Integral Abutment Details - (L.A.) 0°01 - 7°30 Skew
2086-BTE	"BTE" Beams - Integral Abutment Details - (L.A.) 0°01 - 7°30 Skew
2087-BTCD	"BTC" or "BTD" Beams - Integral Abutment Details - (L.A.) 7°31 - 15° Skew
2087-BTE	"BTE" Beams - Integral Abutment Details - (L.A.) 7°31 - 15° Skew
2088-BTCD	"BTC" or "BTD" Beams - Integral Abutment Details - (L.A.) 15°01 - 30° Skew
2088-BTE	"BTE" Beams - Integral Abutment Details - (L.A.) 15°01 - 30° Skew
2089-BTCD	"BTC" or "BTD" Beams - Integral Abutment Details - (R.A.) 0°01 - 7°30 Skew
2089-BTE	"BTE" Beams - Integral Abutment Details - (R.A.) 0°01 - 7°30 Skew
2090-BTCD	"BTC" or "BTD" Beams - Integral Abutment Details - (R.A.) 7°31 - 15° Skew
2090-BTE	"BTE" Beams - Integral Abutment Details - (R.A.) 7°31 - 15° Skew
2091-BTCD	"BTC" or "BTD" Beams - Integral Abutment Details - (R.A.) 15°01 - 30° Skew
2091-BTE	"BTE" Beams - Integral Abutment Details - (R.A.) 15°01 - 30° Skew
4380-BTB-4	30' Roadway PPCB ("BTB" 4 Beams - Integral Abut.) Cross Section
4380-BTB-5	30' Roadway PPCB ("BTB" 5 Beams - Integral Abut.) Cross Section
4380-BTC-4	30' Roadway PPCB ("BTC" 4 Beams - Integral Abut.) Cross Section
4380-BTD-4	30' Roadway PPCB ("BTD" 4 Beams - Integral Abut.) Cross Section
4380-BTE-4	30' Roadway PPCB ("BTE" 4 Beams - Integral Abut.) Cross Section
4380-BTE-5	30' Roadway PPCB ("BTE" 5 Beams - Integral Abut.) Cross Section
4383-BTB-5	40' Roadway PPCB ("BTB" 5 Beams - Integral Abut.) Cross Section
4383-BTB-6	40' Roadway PPCB ("BTB" 6 Beams - Integral Abut.) Cross Section
4383-BTC-5	40' Roadway PPCB ("BTC" 5 Beams - Integral Abut.) Cross Section
4383-BTC-6	40' Roadway PPCB ("BTC" 6 Beams - Integral Abut.) Cross Section
4383-BTD-5	40' Roadway PPCB ("BTD" 5 Beams - Integral Abut.) Cross Section
4383-BTE-5	40' Roadway PPCB ("BTE" 5 Beams - Integral Abut.) Cross Section
4383-BTE-6	40' Roadway PPCB ("BTE" 6 Beams - Integral Abut.) Cross Section
4384-BTB-6	44' Roadway PPCB ("BTB" 6 Beams - Integral Abut.) Cross Section
4384-BTB-7	44' Roadway PPCB ("BTB" 7 Beams - Integral Abut.) Cross Section
4384-BTC-6	44' Roadway PPCB ("BTD" 6 Beams - Integral Abut.) Cross Section
4384-BTD-6	44' Roadway PPCB ("BTD" 6 Beams - Integral Abut.) Cross Section
4384-BTE-6	44' Roadway PPCB ("BTE" 6 Beams - Integral Abut.) Cross Section
4385-BTB-5	40' Roadway PPCB ("BTB" 5 Beams - Integral Abut.) Cross Section (Symm. Crown)
4385-BTB-6	40' Roadway PPCB ("BTB" 6 Beams - Integral Abut.) Cross Section (Symm. Crown)
4385-BTC-5	40' Roadway PPCB ("BTC" 5 Beams - Integral Abut.) Cross Section (Symm. Crown)
4385-BTC-6	40' Roadway PPCB ("BTC" 6 Beams - Integral Abut.) Cross Section (Symm. Crown)
4385-BTD-5	40' Roadway PPCB ("BTD" 5 Beams - Integral Abut.) Cross Section (Symm. Crown)
4385-BTE-5	40' Roadway PPCB ("BTE" 5 Beams - Integral Abut.) Cross Section (Symm. Crown)
4385-BTE-6	40' Roadway PPCB ("BTE" 6 Beams - Integral Abut.) Cross Section (Symm. Crown)
4500-BTB	"BTB" Beams - Part Plan & Longitudinal Section - 0° Skew
4501-BTB	"BTB" Beams - Part Plan & Longitudinal Section - (L.A.) 0°01 - 7°30 Skew
4502-BTB	"BTB" Beams - Part Plan & Longitudinal Section - (L.A.) 7°31 - 15° Skew
4503-BTB	"BTB" Beams - Part Plan & Longitudinal Section - (L.A.) 15°01 - 30° Skew
4504-BTB	"BTB" Beams - Part Plan & Longitudinal Section - (R.A.) 0°01 - 7°30 Skew
4505-BTB	"BTB" Beams - Part Plan & Longitudinal Section - (R.A.) 7°31 - 15° Skew
4506-BTB	"BTB" Beams - Part Plan & Longitudinal Section - (R.A.) 15°01 - 30° Skew
4507-BTCD	"BTC" or "BTD" Beams - Part Plan & Longitudinal Section - 0° Skew
4507-BTE	"BTE" Beams - Part Plan & Longitudinal Section - 0° Skew

Index of BT Integral Abutment Bridge Standards

Standard	Description
4508-BTCD	"BTC" or "BTD" Beams - Part Plan & Longitudinal Section - (L.A.) 0°01 - 7°30 Skew
4508-BTE	"BTE" Beams - Part Plan & Longitudinal Section - (L.A.) 0°01 - 7°30 Skew
4509-BTCD	"BTC" or "BTD" Beams - Part Plan & Longitudinal Section - (L.A.) 7°31 - 15° Skew
4509-BTE	"BTE" Beams - Part Plan & Longitudinal Section - (L.A.) 7°31 - 15° Skew
4510-BTCD	"BTC" or "BTD" Beams - Part Plan & Longitudinal Section - (L.A.) 15°01 - 30° Skew
4510-BTE	"BTE" Beams - Part Plan & Longitudinal Section - (L.A.) 15°01 - 30° Skew
4511-BTCD	"BTC" or "BTD" Beams - Part Plan & Longitudinal Section - (R.A.) 0°01 - 7°30 Skew
4511-BTE	"BTE" Beams - Part Plan & Longitudinal Section - (R.A.) 0°01 - 7°30 Skew
4512-BTCD	"BTC" or "BTD" Beams - Part Plan & Longitudinal Section - (R.A.) 7°31 - 15° Skew
4512-BTE	"BTE" Beams - Part Plan & Longitudinal Section - (R.A.) 7°31 - 15° Skew
4513-BTCD	"BTC" or "BTD" Beams - Part Plan & Longitudinal Section - (R.A.) 15°01 - 30° Skew
4513-BTE	"BTE" Beams - Part Plan & Longitudinal Section - (R.A.) 15°01 - 30° Skew
4514-BTB	Integral Abut. "BTB" Beams - Bar List & Super. Details - 0° Skew
4515-BTB	Integral Abut. "BTB" Beams - Bar List & Super. Details - 0°01 - 7°30 Skew
4516-BTB	Integral Abut. "BTB" Beams - Bar List & Super. Details - 7°31 - 15° Skew
4517-BTB	Integral Abut. "BTB" Beams - Bar List & Super. Details - 15°01 - 30° Skew
4518-BTCD	Integral Abut. "BTC" or "BTD" Beams - Bar List & Super. Details - 0° Skew
4518-BTE	Integral Abut. "BTE" Beams - Bar List & Super. Details - 0° Skew
4519-BTCD	Integral Abut. "BTC" or "BTD" Beams - Bar List & Super. Details - 0°01 - 7°30 Skew
4519-BTE	Integral Abut. "BTE" Beams - Bar List & Super. Details - 0°01 - 7°30 Skew
4520-BTCD	Integral Abut. "BTC" or "BTD" Beams - Bar List & Super. Details - 7°31 - 15° Skew
4520-BTE	Integral Abut. "BTE" Beams - Bar List & Super. Details - 7°31 - 15° Skew
4521-BTCD	Integral Abut. "BTC" or "BTD" Beams - Bar List & Super. Details - 15°01 - 30° Skew
4521-BTE	Integral Abut. "BTE" Beams - Bar List & Super. Details - 15°01 - 30° Skew

Index of BT Integral Abut. Bridge Stds

Correction 04-14: Added Concrete Quantity Table & Referral Note to Summary Quantity Sheet. Removed Design Bearing Note for Abut. Piling from Abutment Notes.
Revised 05-2026: Rearranged locations of "Abutment Pile Plan" and "Abutment Step Diagram" details. In "Part Section A-A", changed 8g1 bar edge of abutment offset dimension to 3 3/4" (was 3"), and changed spacing to 2 Equal Spaces (was 2 Spaces at 9"). Added "Control Point" text.
BTIntegralBridges.dgn - 2078-BTB - Issued 02-08. This Sheet Re-Issued 11-2023. Sheet Format Update.

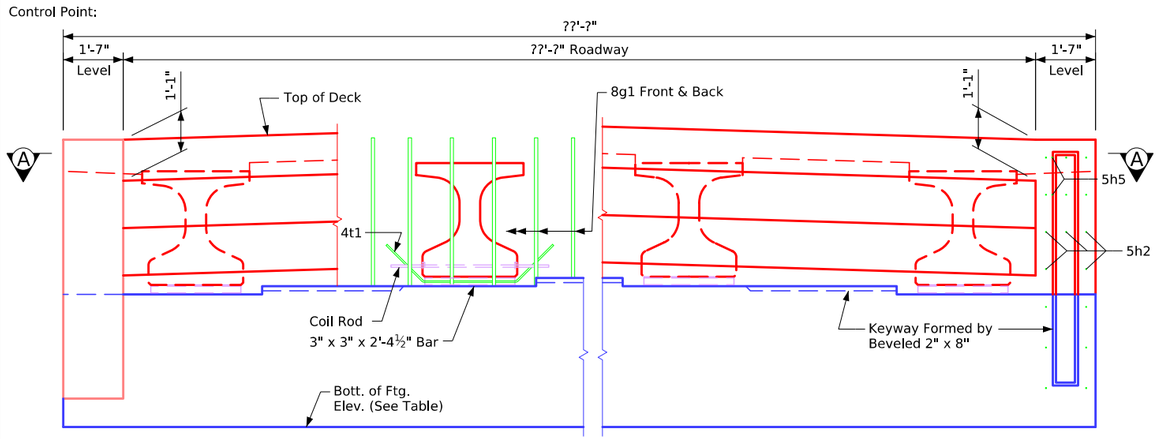

Part Rear Elevation at Abutment

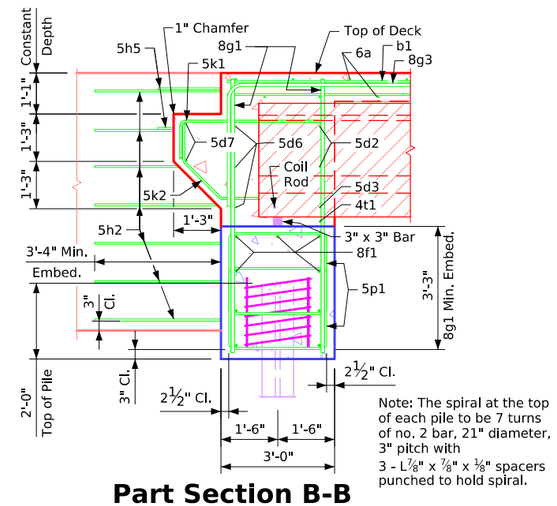

Part Section B-B

Table of Abutment Elevations

Point	? Abutment	? Abutment
Elev. A	???.??	???.??
Bottom Footing Elev.	???.??	???.??

Table of Abutment Steps

Step	? Abutment	? Abutment
a	???.??	???.??

Abutment Concrete Quantity

Location	Quantity
? Abutment Footing	?.?
? Abutment Footing	?.?
Total (Cu. Yds.)	?.?

Notes:
Concrete Quantities are included on the Summary Quantities sheet.
?? - HP ?? x ?? steel bearing piling required at each abutment.
Barrier rail not shown in details.

Note to Designer:
Maximum Spacing 1'-4".

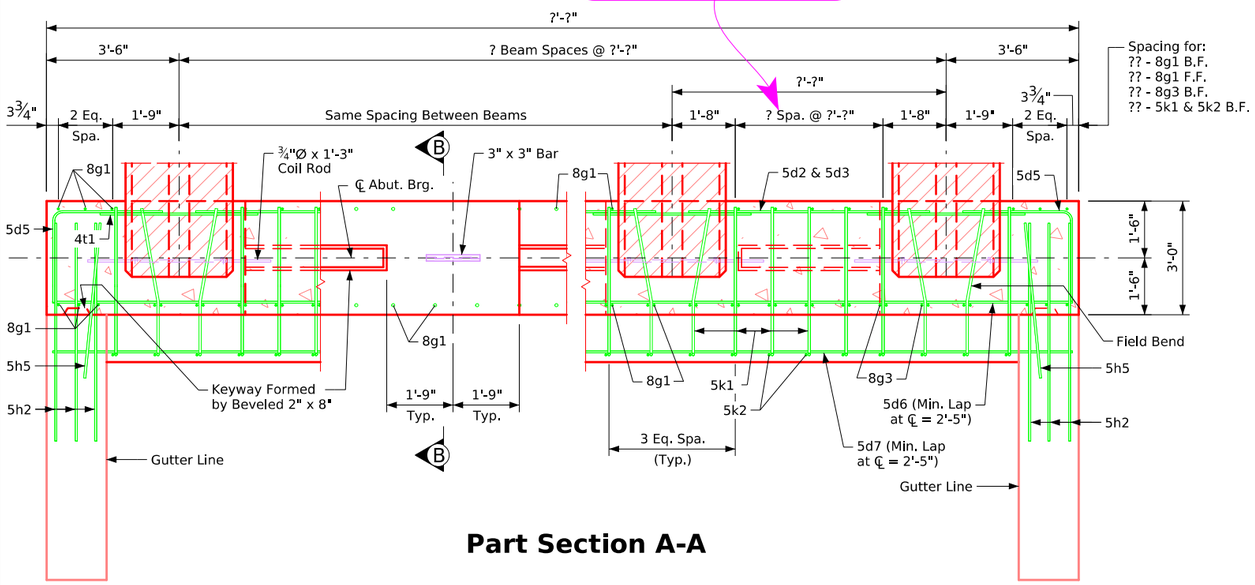

Part Section A-A

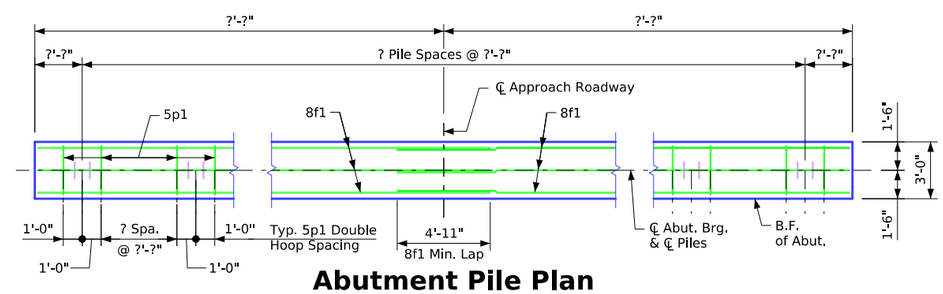

Abutment Pile Plan

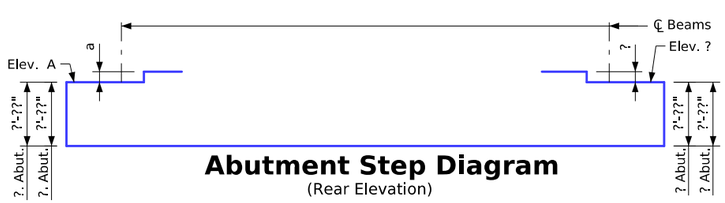

Abutment Step Diagram
(Rear Elevation)

Abutment Notes:

Minimum clear distance from face of concrete to near reinforcing bar is to be 2" unless otherwise noted or shown.

If necessary to prevent damage to the end of the bridge deck and backwall from construction equipment, an appropriate method of protection approved by the Engineer shall be provided by the Bridge Contractor at no extra cost to the State.

Abutment Footing Details

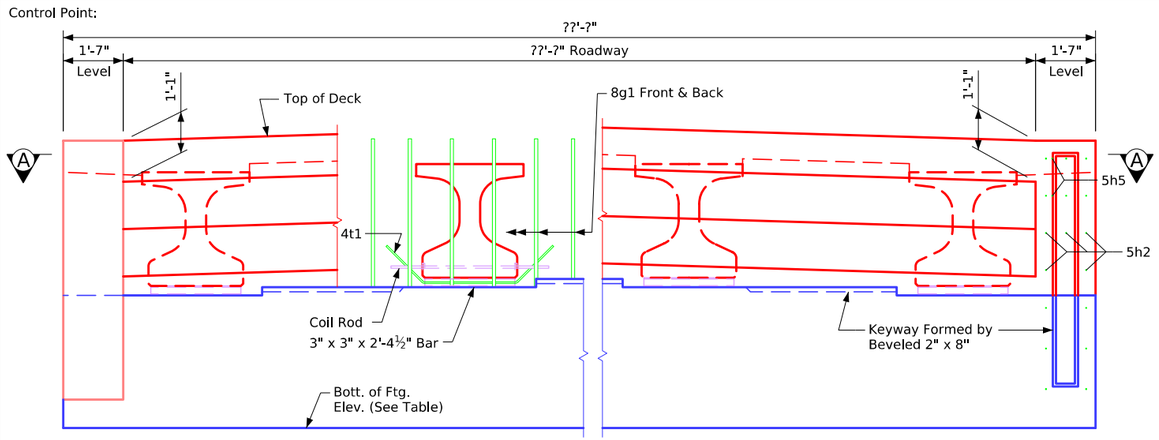

Part Rear Elevation at Abutment

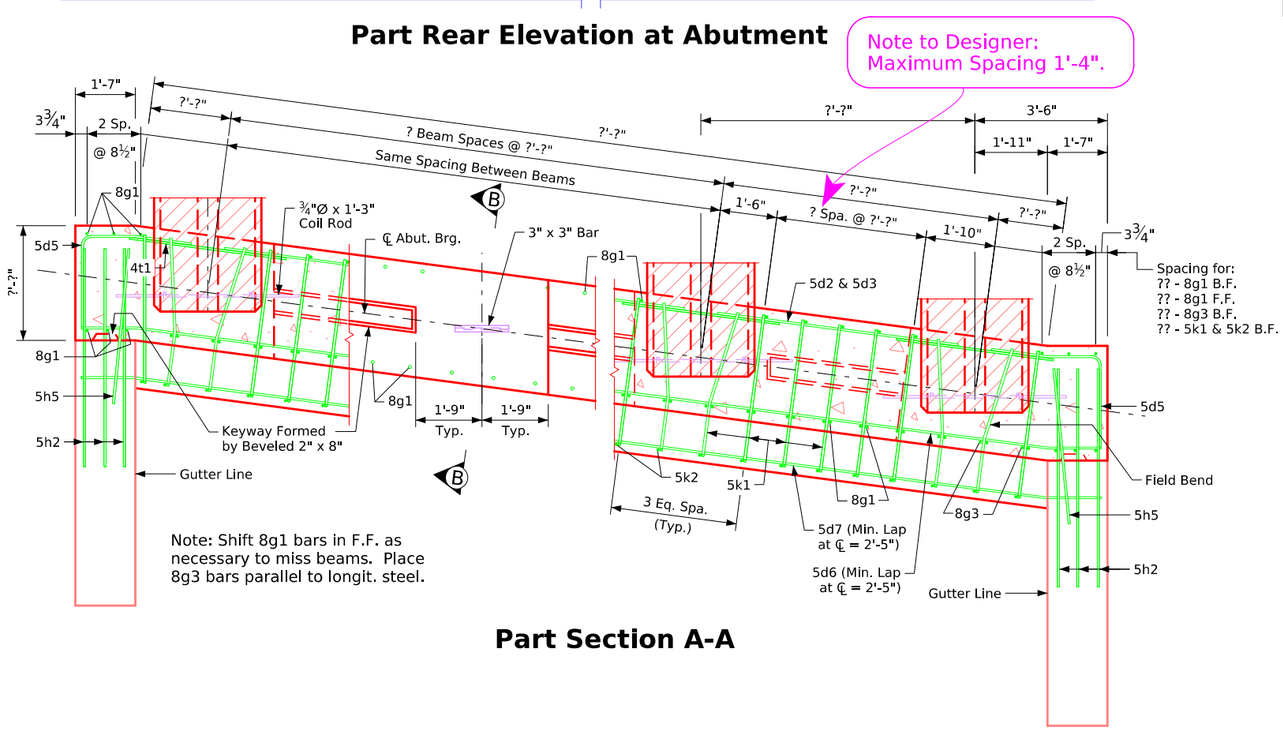

Note: Shift 8g1 bars in F.F. as necessary to miss beams. Place 8g3 bars parallel to longit. steel.

Part Section A-A

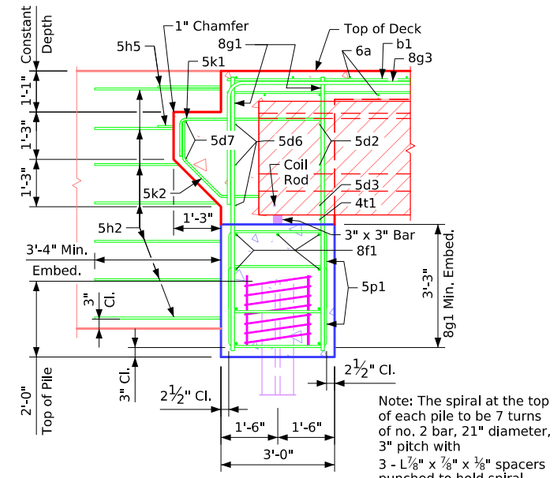

Note: The spiral at the top of each pile to be 7 turns of no. 2 bar, 21" diameter, 3" pitch with 3 - L⅞" x ⅞" x ⅛" spacers punched to hold spiral.

Part Section B-B

Table of Abutment Elevations

Point	? Abutment	? Abutment
Elev. A	???.??	???.??
Bottom Footing Elev.	???.??	???.??

Table of Abutment Steps

Step	? Abutment	? Abutment
a	???.??	???.??

Abutment Concrete Quantity

Location	Quantity
? Abutment Footing	?.?
? Abutment Footing	?.?
Total (Cu. Yds.)	?.?

Notes:
Concrete Quantities are included on the Summary Quantities sheet.
?? - HP ?? x ?? steel bearing piling required at each abutment.
Barrier rail not shown in details.

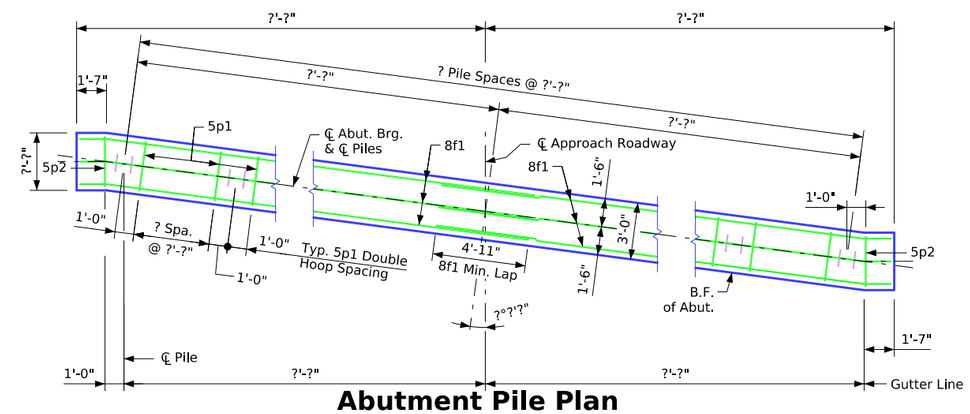

Abutment Pile Plan

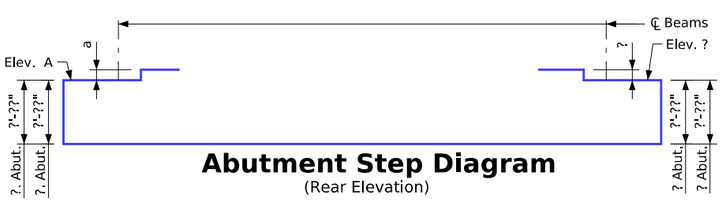

Abutment Step Diagram

(Rear Elevation)

Abutment Notes:

Minimum clear distance from face of concrete to near reinforcing bar is to be 2" unless otherwise noted or shown.

If necessary to prevent damage to the end of the bridge deck and backwall from construction equipment, an appropriate method of protection approved by the Engineer shall be provided by the Bridge Contractor at no extra cost to the State.

Abutment Footing Details

Correction 04-14: Added Concrete Quantity Table & Referral Note to Summary Quantity Sheet. Removed Design Bearing Note for Abut. Piling from Abutment Notes.
Revised 05-2026: Rearranged locations of "Abutment Pile Plan" and "Abutment Step Diagram" details. In "Part Section A-A", changed 8g1 bar edge of abutment offset dimension to 3 3/4" (was 3"), and changed spacing to 2 Spaces at 8 1/2" (was 2 Spaces at 9"). Added "Control Point" text.
Revised 06-2026: In "Part Section A-A", corrected location of "3 Eq. Spa. (Typ.)" dimension of rebar spacing at end of beam.
BTIntegralBridges.dgn - 2079-BTB - Issued 02-08. This Sheet Re-Issued 11-2023. Sheet Format Update.

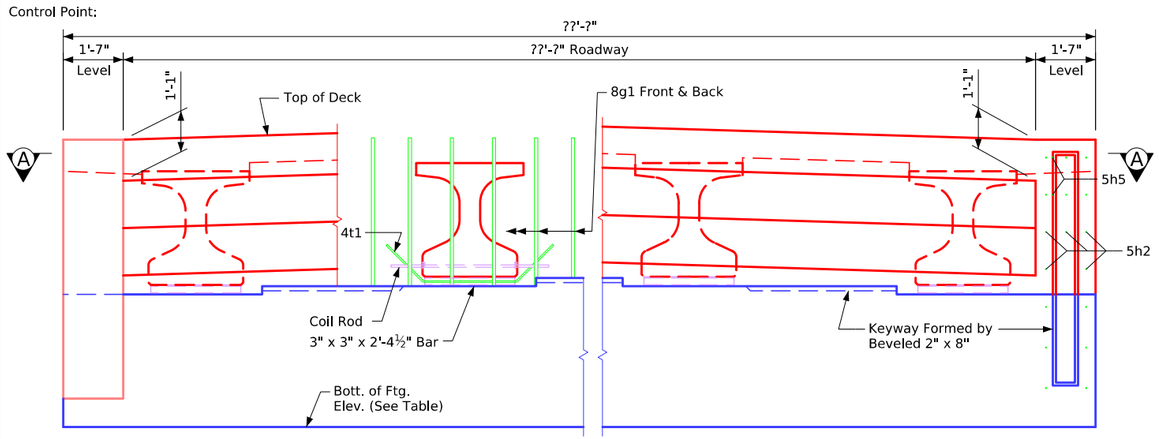

Part Rear Elevation at Abutment

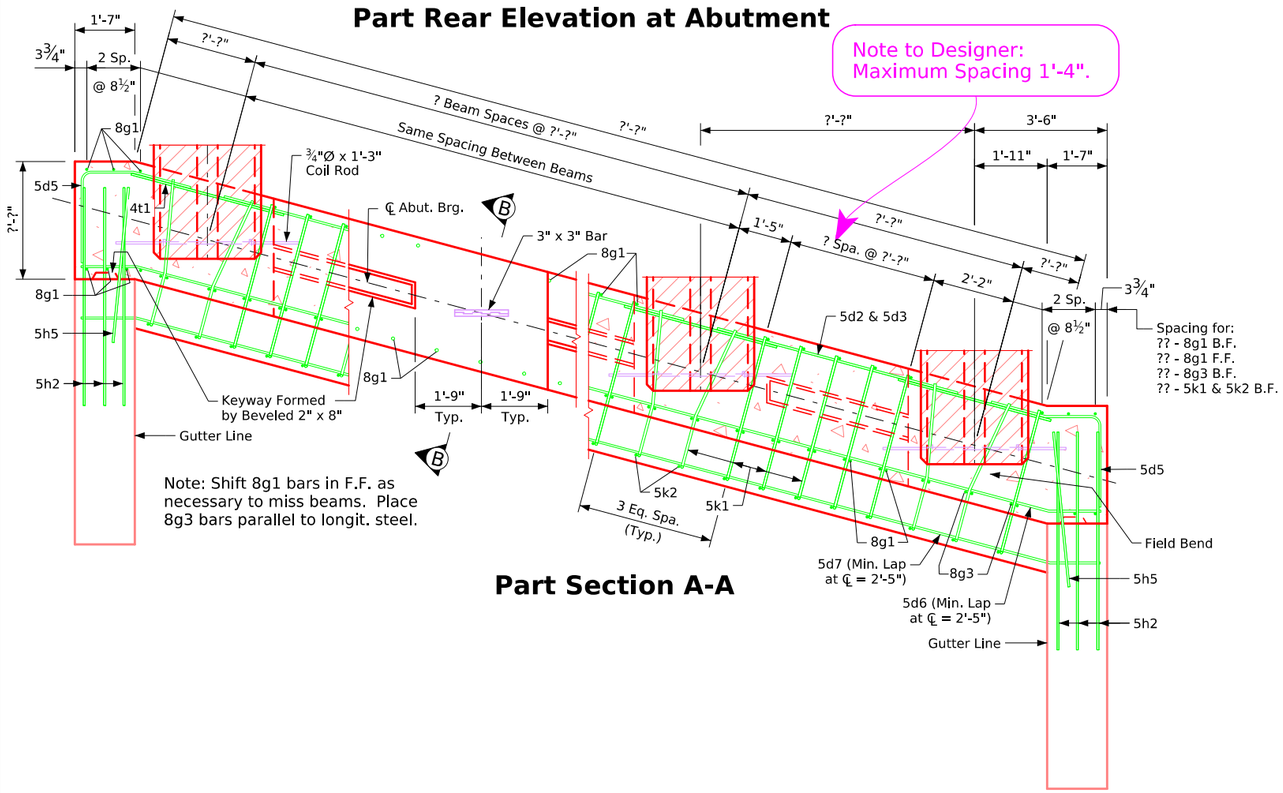

Part Section A-A

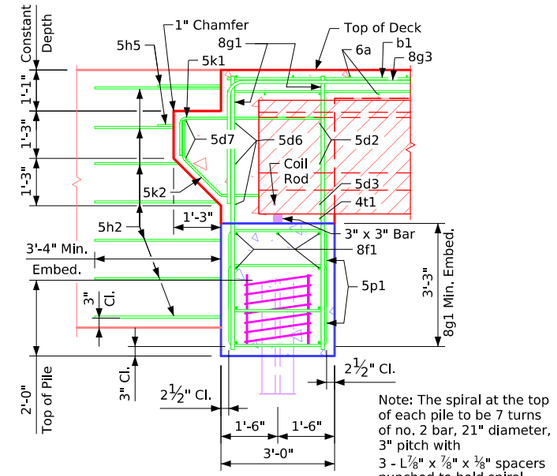

Note: The spiral at the top of each pile to be 7 turns of no. 2 bar, 21" diameter, 3" pitch with 3 - L⅞" x ⅞" x ⅛" spacers punched to hold spiral.

Part Section B-B

Table of Abutment Elevations

Point	? Abutment	? Abutment
Elev. A	???.??	???.??
Bottom Footing Elev.	???.??	???.??

Table of Abutment Steps

Step	? Abutment	? Abutment
a	???.??	???.??

Abutment Concrete Quantity

Location	Quantity
? Abutment Footing	?.?
? Abutment Footing	?.?
Total (Cu. Yds.)	?.?

Notes:
Concrete Quantities are included on the Summary Quantities sheet.
?? - HP ?? x ?? steel bearing piling required at each abutment.
Barrier rail not shown in details.

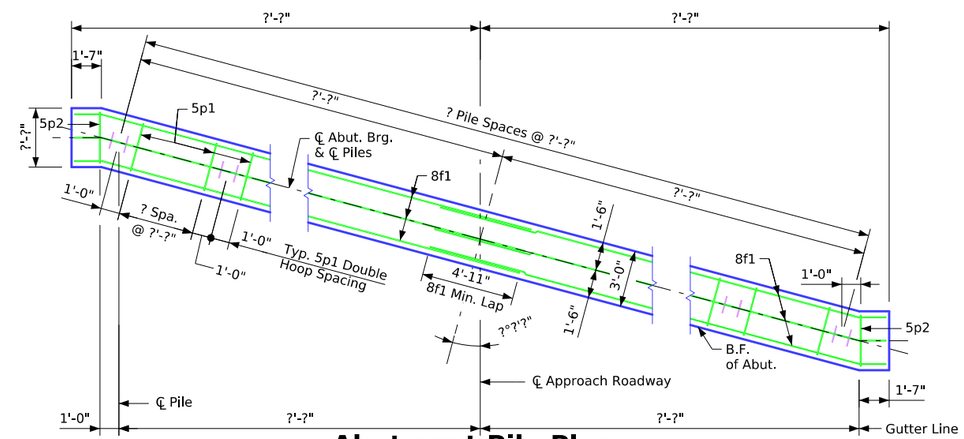

Abutment Pile Plan

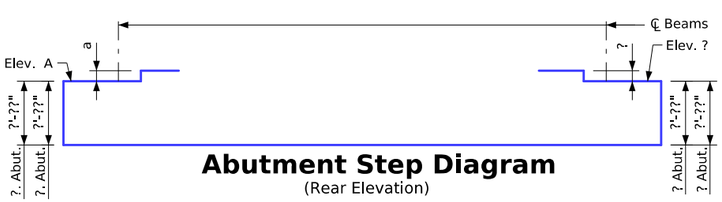

Abutment Step Diagram

(Rear Elevation)

Abutment Notes:

Minimum clear distance from face of concrete to near reinforcing bar is to be 2" unless otherwise noted or shown.

If necessary to prevent damage to the end of the bridge deck and backwall from construction equipment, an appropriate method of protection approved by the Engineer shall be provided by the Bridge Contractor at no extra cost to the State.

Abutment Footing Details

Correction 04-14: Added Concrete Quantity Table & Referral Note to Summary Quantity Sheet. Removed Design Bearing Note for Abut. Piling from Abutment Notes.
Revised 05-2026: Rearranged locations of "Abutment Pile Plan" and "Abutment Step Diagram" details. In "Part Section A-A", changed 8g1 bar edge of abutment offset dimension to 3 3/4" (was 3"), and changed spacing to 2 Spaces at 8 1/2" (was 2 Spaces at 9"). Added "Control Point" text.
Revised 06-2026: In "Part Section A-A", corrected location of "3 Eq. Spa. (Typ.)" dimension of rebar spacing at end of beam and adjusted section cut to accommodate showing the rebar for this.
BTIntegralBridges.dgn - 2080-BTB - Issued 02-08. This Sheet Re-Issued 11-2023. Sheet Format Update.

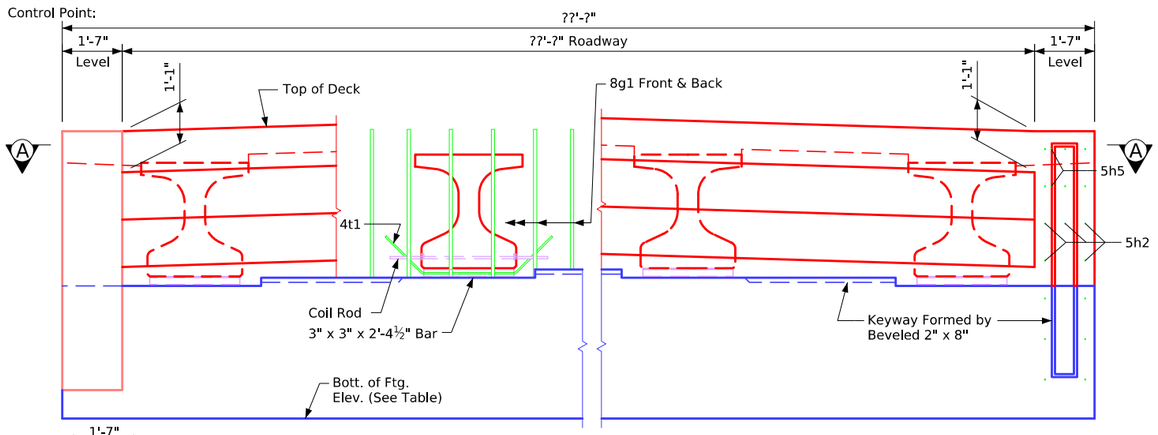

Part Rear Elevation at Abutment

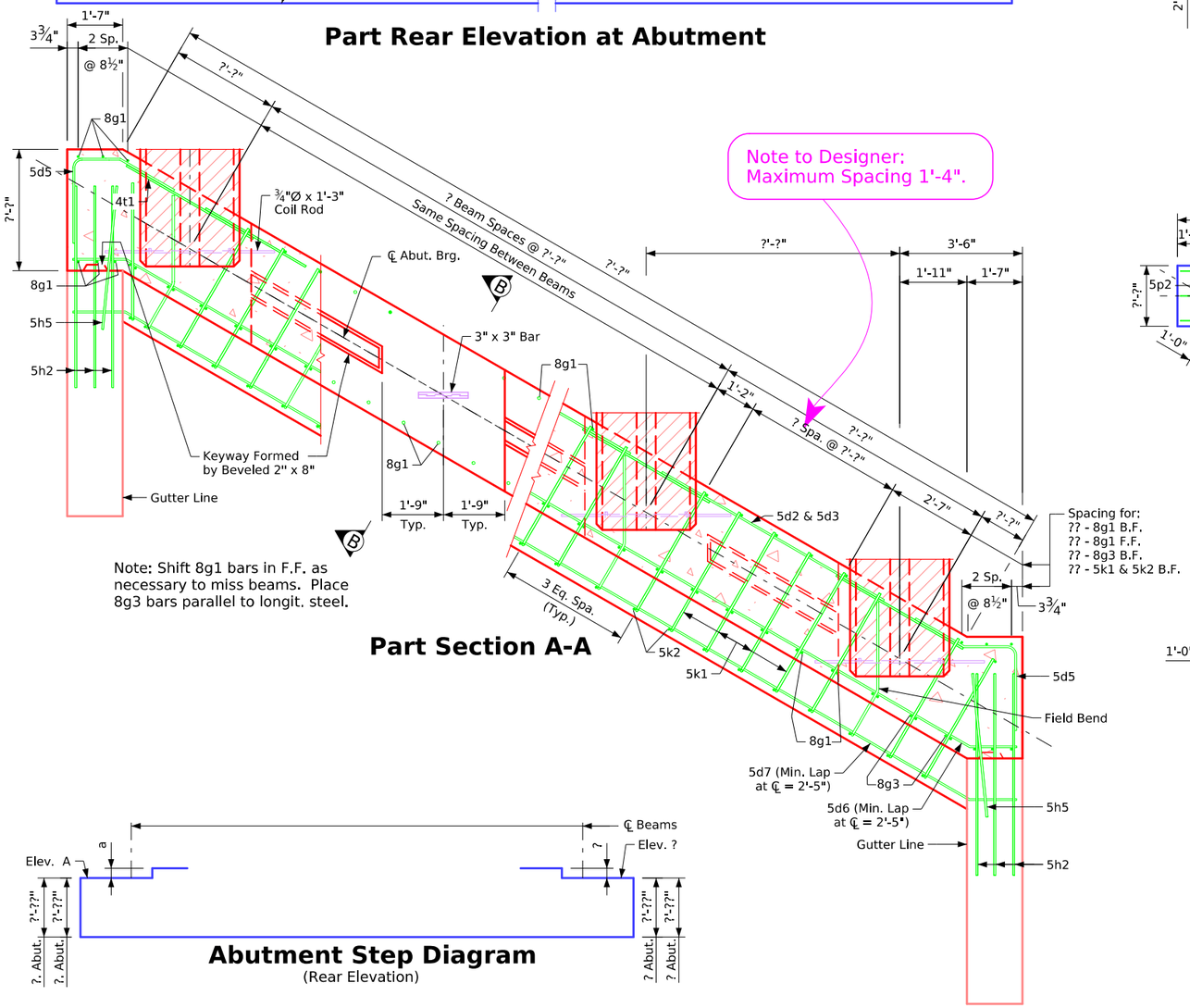

Note: Shift 8g1 bars in F.F. as necessary to miss beams. Place 8g3 bars parallel to longit. steel.

Part Section A-A

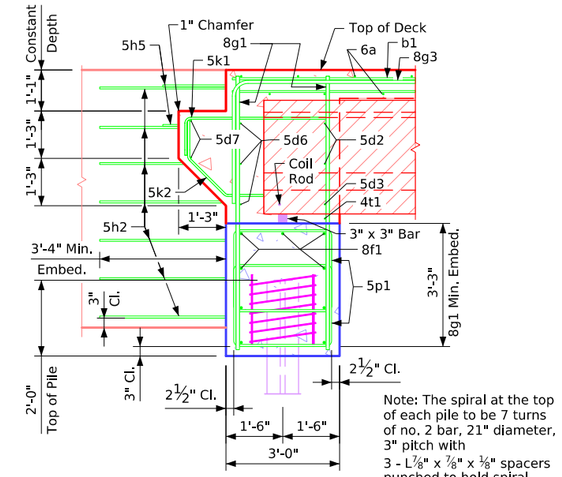

Note: The spiral at the top of each pile to be 7 turns of no. 2 bar, 21" diameter, 3" pitch with 3 - L⅞" x ⅞" x ⅛" spacers punched to hold spiral.

Part Section B-B

Table of Abutment Elevations

Point	? Abutment	? Abutment
Elev. A	???.??	???.??
Bottom Footing Elev.	???.??	???.??

Table of Abutment Steps

Step	? Abutment	? Abutment
a	???.??	???.??

Abutment Concrete Quantity

Location	Quantity
? Abutment Footing	?.?
? Abutment Footing	?.?
Total (Cu. Yds.)	?.?

Notes:
Concrete Quantities are included on the Summary Quantities sheet.
?? - HP ?? x ?? steel bearing piling required at each abutment.
Barrier rail not shown in details.

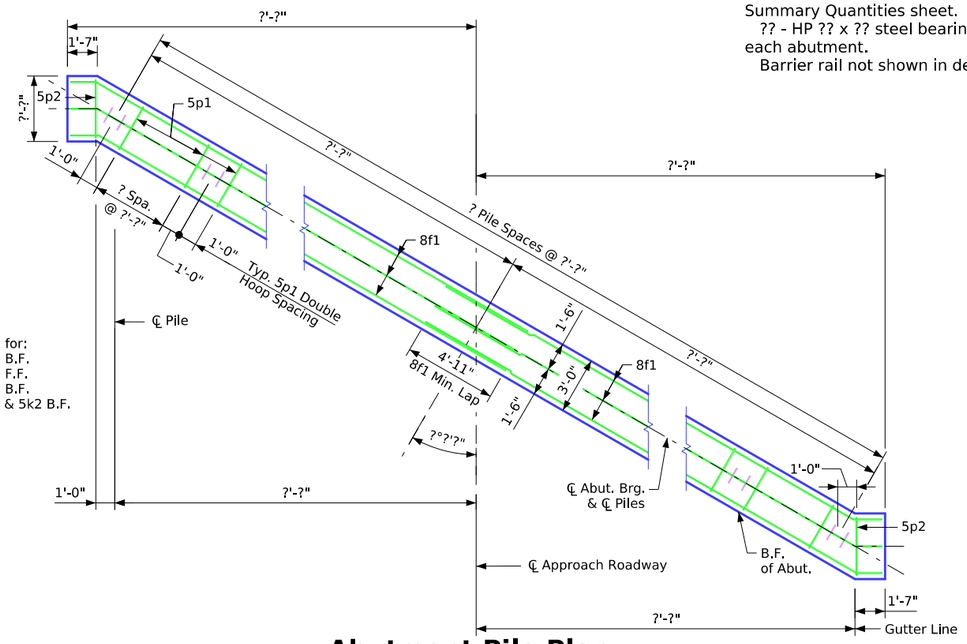

Abutment Pile Plan

Abutment Step Diagram
(Rear Elevation)

Abutment Notes:

Minimum clear distance from face of concrete to near reinforcing bar is to be 2" unless otherwise noted or shown.

If necessary to prevent damage to the end of the bridge deck and backwall from construction equipment, an appropriate method of protection approved by the Engineer shall be provided by the Bridge Contractor at no extra cost to the State.

Abutment Footing Details

Correction 04-14: Added Concrete Quantity Table & Referral Note to Summary Quantity Sheet. Removed Design Bearing Note for Abut. Piling from Abutment Notes.
Revised 05-2026: In "Part Section A-A", changed 8g1 bar edge of abutment offset dimension to 3 3/4" (was 3"), and changed spacing to 2 Spaces at 8 1/2" (was 2 Spaces at 9"). Added "Control Point" text.
Revised 06-2026: In "Part Section A-A", corrected location of "3 Eq. Spa. (Typ.)" dimension of rebar spacing at end of beam and adjusted section cut to accommodate showing the rebar for this.
BTIntegralBridges.dgn - 2081-BTB - Issued 02-08. This Sheet Re-Issued 11-2023. Sheet Format Update.

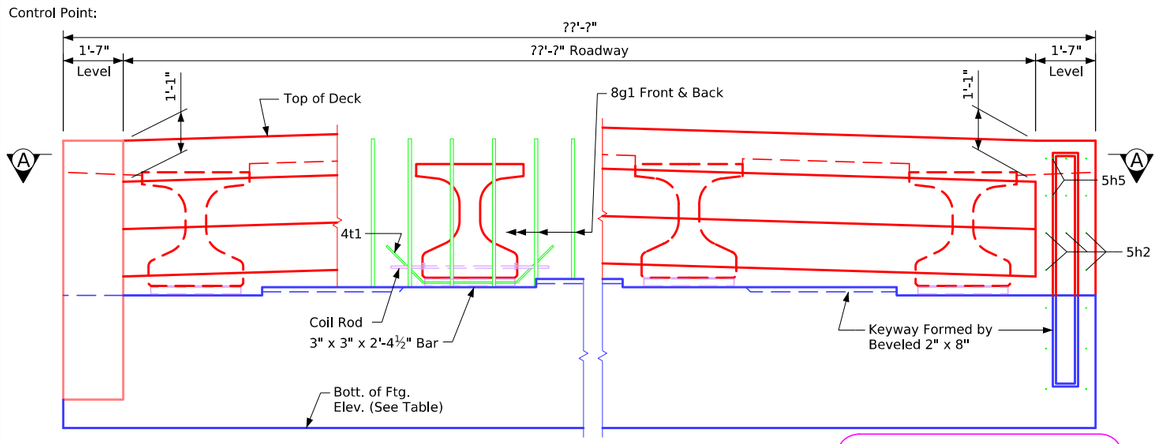

Part Rear Elevation at Abutment

Note to Designer:
Maximum Spacing 1'-4".

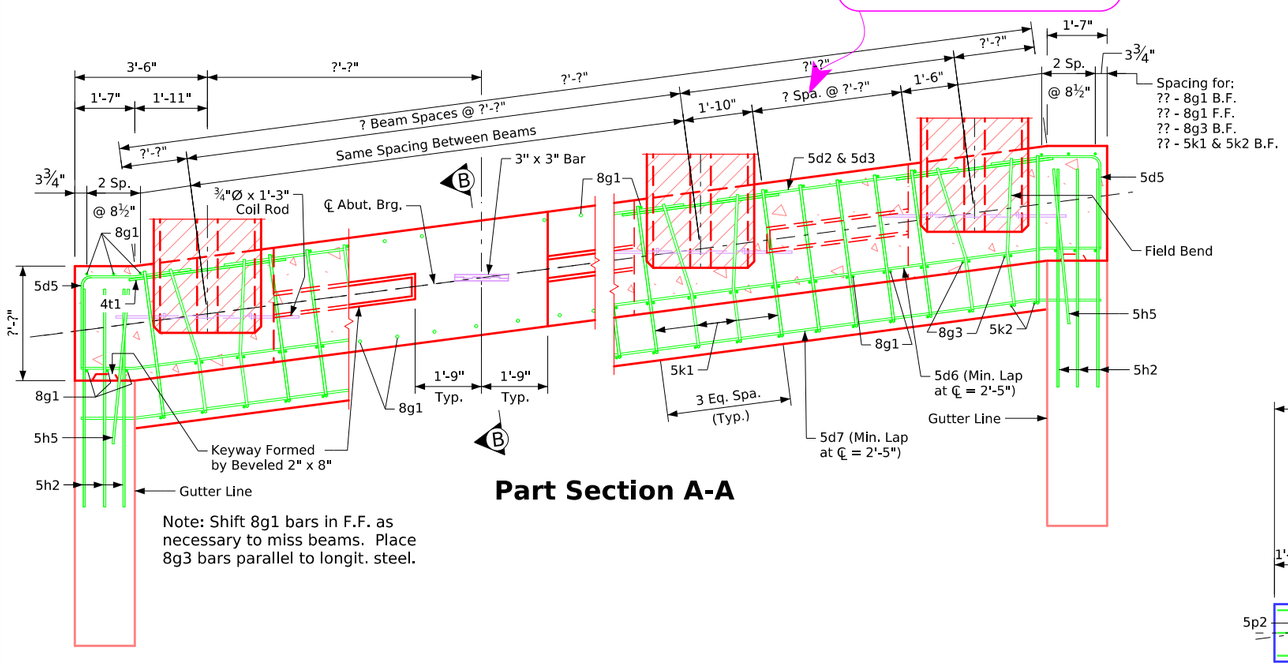

Note: Shift 8g1 bars in F.F. as necessary to miss beams. Place 8g3 bars parallel to longit. steel.

Part Section A-A

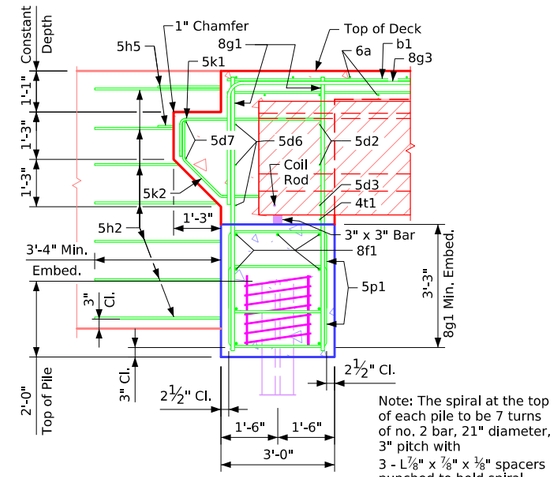

Note: The spiral at the top of each pile to be 7 turns of no. 2 bar, 21" diameter, 3" pitch with 3 - L⅞" x ⅞" x ⅛" spacers punched to hold spiral.

Part Section B-B

Table of Abutment Elevations

Point	? Abutment	? Abutment
Elev. A	???.??	???.??
Bottom Footing Elev.	???.??	???.??

Table of Abutment Steps

Step	? Abutment	? Abutment
a	???.??	???.??

Abutment Concrete Quantity

Location	Quantity
? Abutment Footing	?.?
? Abutment Footing	?.?
Total (Cu. Yds.)	?.?

Notes:
Concrete Quantities are included on the Summary Quantities sheet.
?? - HP ?? x ?? steel bearing piling required at each abutment.
Barrier rail not shown in details.

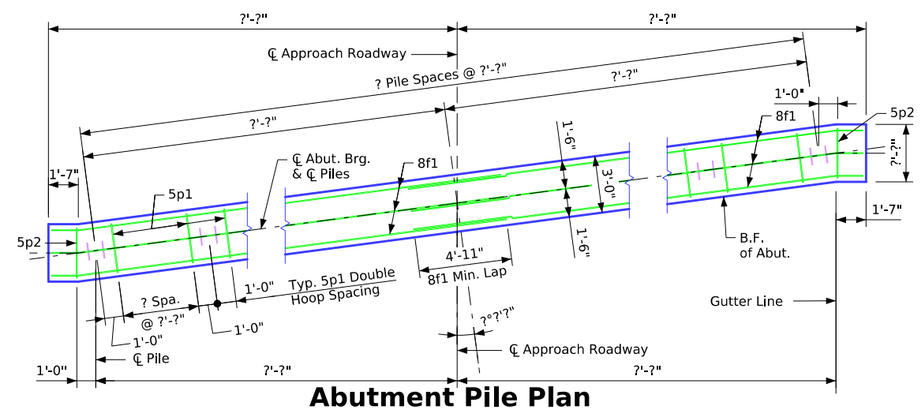

Abutment Pile Plan

Abutment Step Diagram
(Rear Elevation)

Abutment Notes:

Minimum clear distance from face of concrete to near reinforcing bar is to be 2" unless otherwise noted or shown.

If necessary to prevent damage to the end of the bridge deck and backwall from construction equipment, an appropriate method of protection approved by the Engineer shall be provided by the Bridge Contractor at no extra cost to the State.

Abutment Footing Details

Correction 04-14: Added Concrete Quantity Table & Referral Note to Summary Quantity Sheet. Removed Design Bearing Note for Abut. Piling from Abutment Notes.
Revised 05-2026: In "Part Section A-A", changed 8g1 bar edge of abutment offset dimension to 3 3/4" (was 3"), and changed spacing to 2 Spaces at 8 1/2" (was 2 Spaces at 9"). Added "Control Point" text.
BTIntegralBridges.dgn - 2082-BTB - Issued 02-08. This Sheet Re-Issued 11-2023. Sheet Format Update.

Control Point:

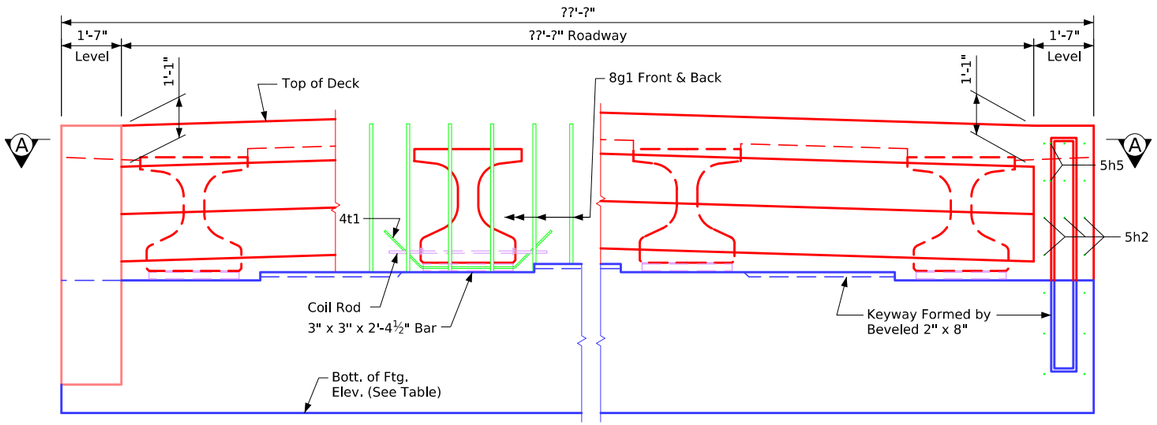

Part Rear Elevation at Abutment

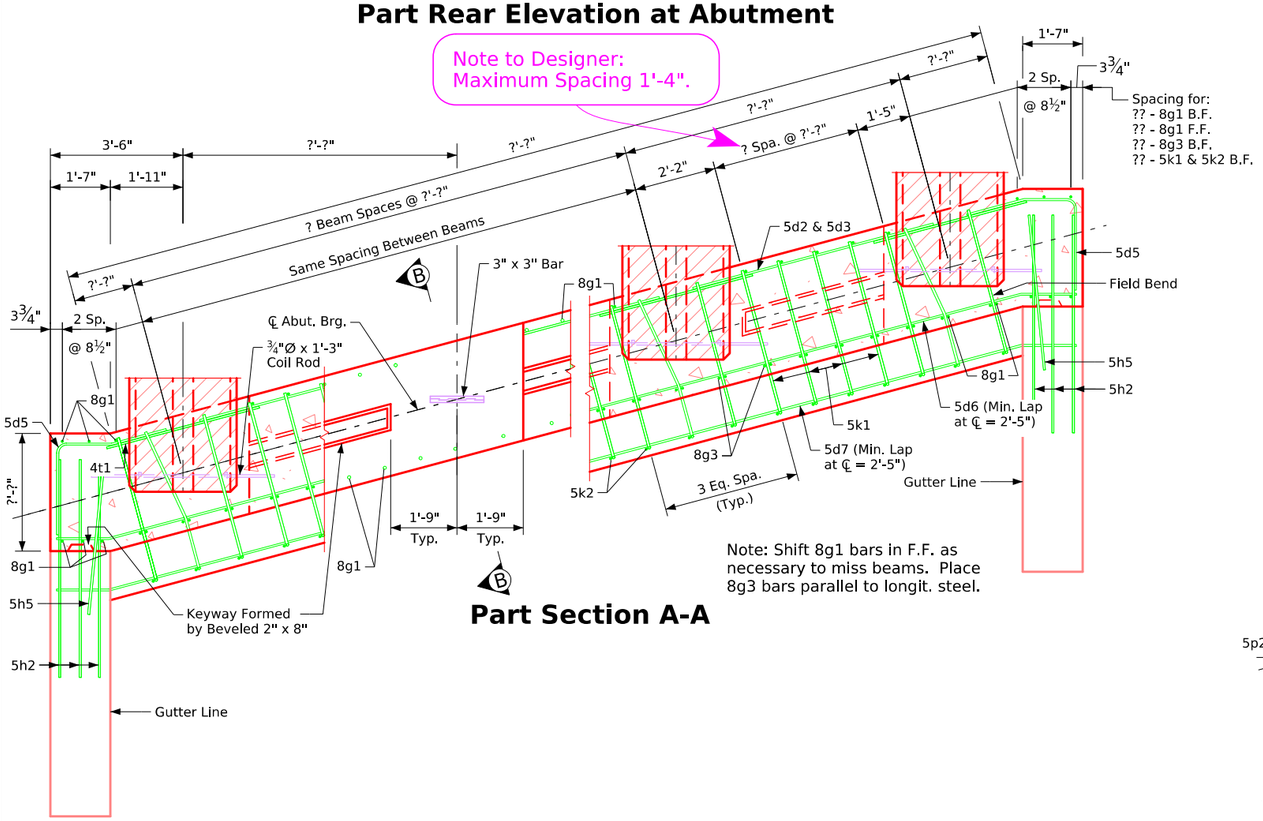

Note: Shift 8g1 bars in F.F. as necessary to miss beams. Place 8g3 bars parallel to longit. steel.

Part Section A-A

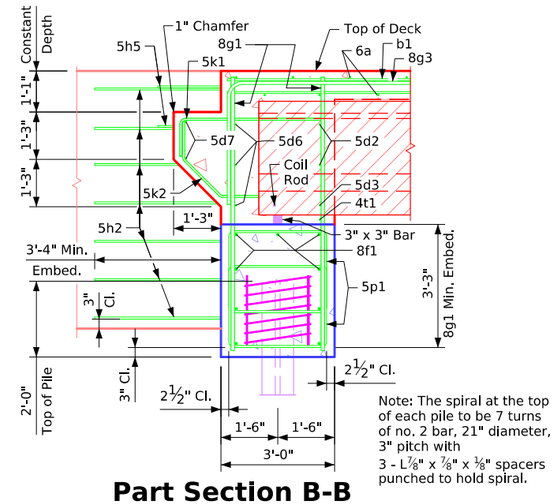

Note: The spiral at the top of each pile to be 7 turns of no. 2 bar, 21" diameter, 3" pitch with 3 - L⅞" x ⅞" x ⅛" spacers punched to hold spiral.

Part Section B-B

Table of Abutment Elevations

Point	? Abutment	? Abutment
Elev. A	???.??	???.??
Bottom Footing Elev.	???.??	???.??

Table of Abutment Steps

Step	? Abutment	? Abutment
a	???.??	???.??

Abutment Concrete Quantity

Location	Quantity
? Abutment Footing	?.?
? Abutment Footing	?.?
Total (Cu. Yds.)	?.?

Notes:
Concrete Quantities are included on the Summary Quantities sheet.
?? - HP ?? x ?? steel bearing piling required at each abutment.
Barrier rail not shown in details.

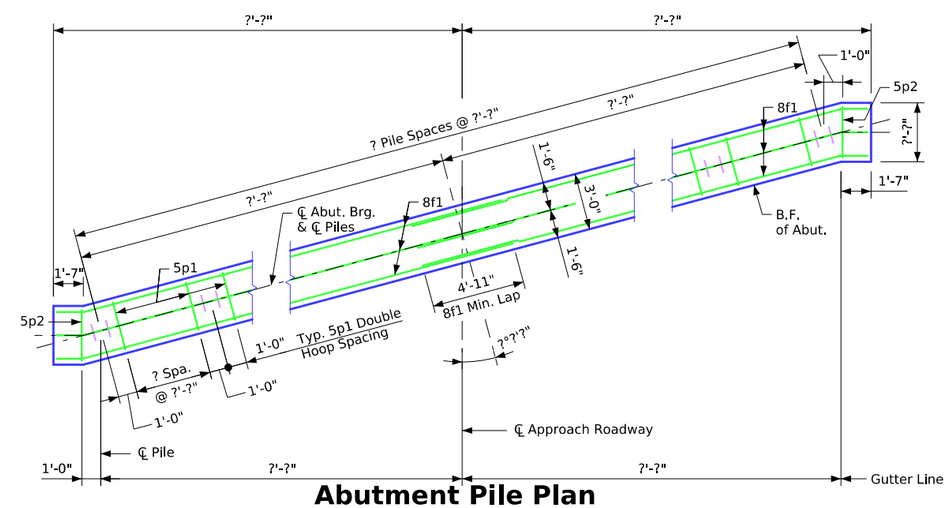

Abutment Pile Plan

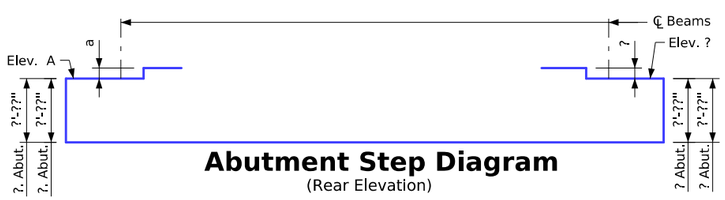

Abutment Step Diagram
(Rear Elevation)

Abutment Notes:

Minimum clear distance from face of concrete to near reinforcing bar is to be 2" unless otherwise noted or shown.

If necessary to prevent damage to the end of the bridge deck and backwall from construction equipment, an appropriate method of protection approved by the Engineer shall be provided by the Bridge Contractor at no extra cost to the State.

Abutment Footing Details

Correction 04-14: Added Concrete Quantity Table & Referral Note to Summary Quantity Sheet. Removed Design Bearing Note for Abut. Piling from Abutment Notes.
Revised 05-2026: In "Part Section A-A", changed 8g1 bar edge of abutment offset dimension to 3 3/4" (was 3"), and changed spacing to 2 Spaces at 8 1/2" (was 2 Spaces at 9"). Added "Control Point" text.
Revised 06-2026: In "Part Section A-A", corrected location of "3 Eq. Spa. (Typ.)" dimension of rebar spacing at end of beam.
BTIntegralBridges.dgn - 2083-BTB - Issued 02-08. This Sheet Re-Issued 11-2023. Sheet Format Update.

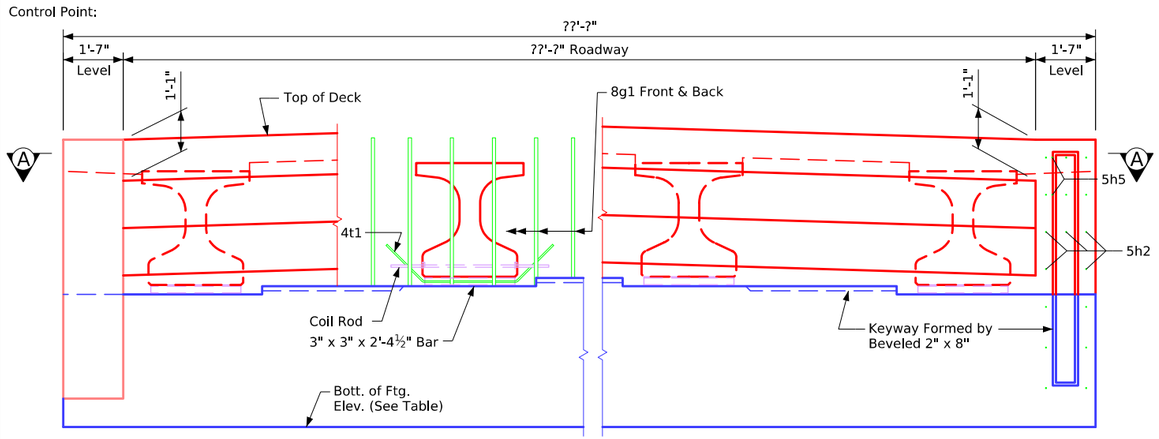

Part Rear Elevation at Abutment

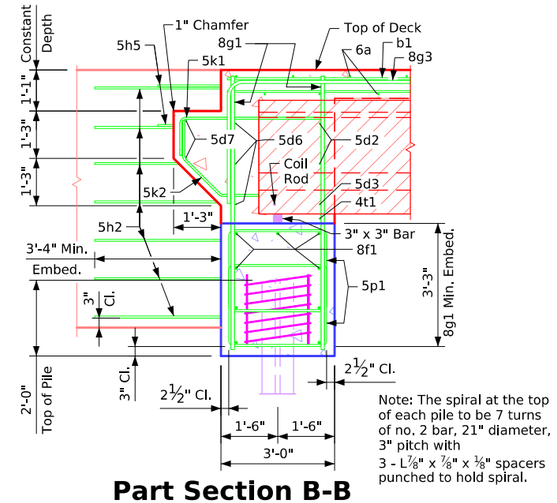

Note: The spiral at the top of each pile to be 7 turns of no. 2 bar, 21" diameter, 3" pitch with 3 - L⅞" x ⅞" x ⅛" spacers punched to hold spiral.

Part Section B-B

Table of Abutment Elevations

Point	? Abutment	? Abutment
Elev. A	???.??	???.??
Bottom Footing Elev.	???.??	???.??

Table of Abutment Steps

Step	? Abutment	? Abutment
a	???.??	???.??

Abutment Concrete Quantity

Location	Quantity
? Abutment Footing	?.?
? Abutment Footing	?.?
Total (Cu. Yds.)	?.?

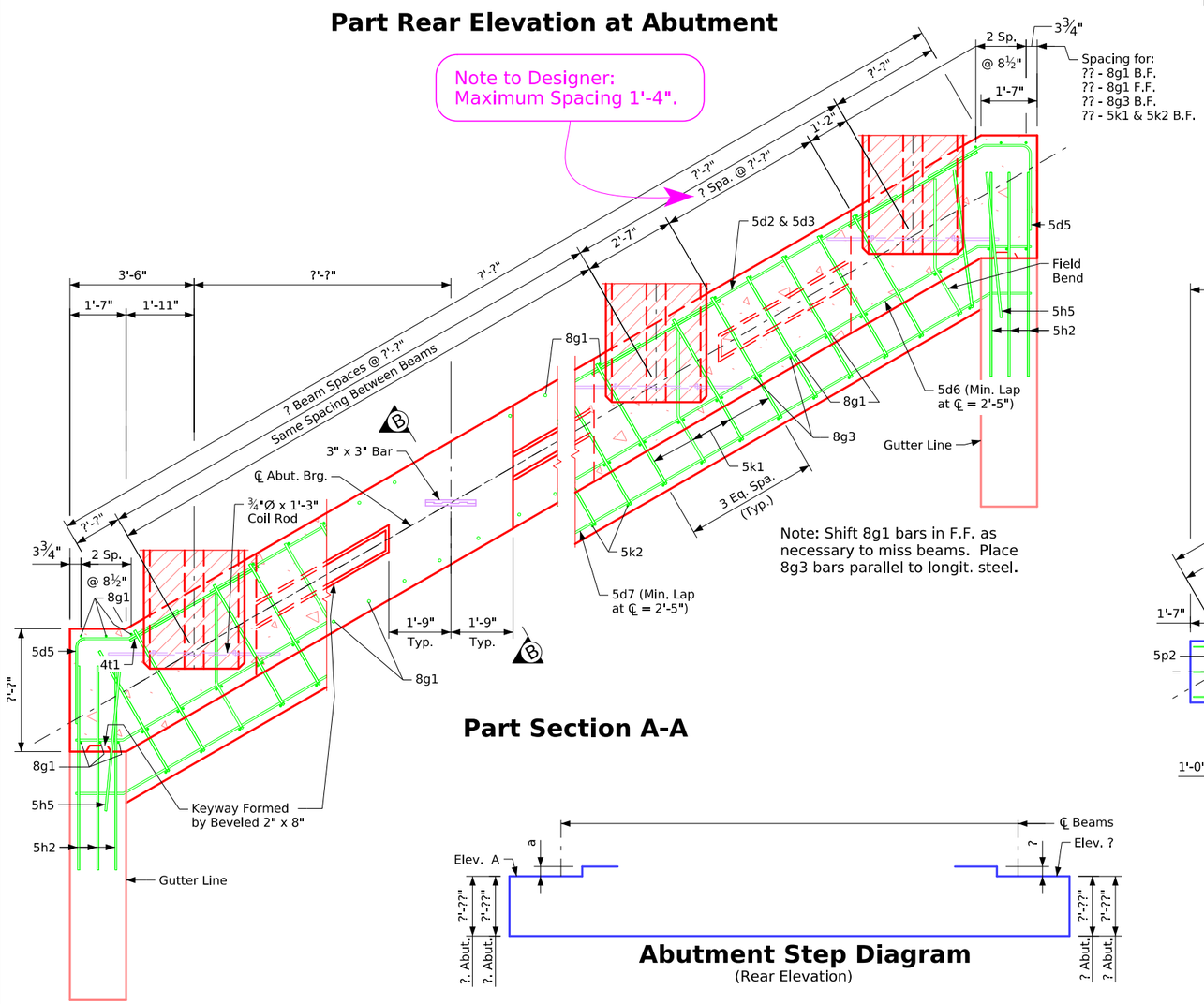

Note: Shift 8g1 bars in F.F. as necessary to miss beams. Place 8g3 bars parallel to longit. steel.

Part Section A-A

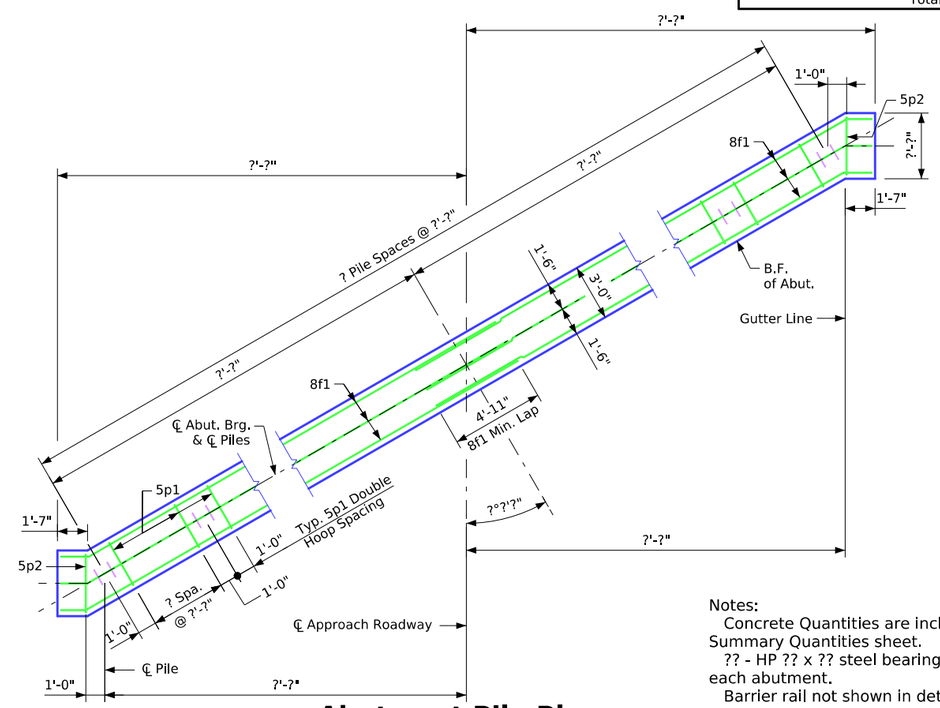

Abutment Pile Plan

Notes:
Concrete Quantities are included on the Summary Quantities sheet.
?? - HP ?? x ?? steel bearing piling required at each abutment.
Barrier rail not shown in details.

Abutment Step Diagram

(Rear Elevation)

Abutment Notes:

Minimum clear distance from face of concrete to near reinforcing bar is to be 2" unless otherwise noted or shown.

If necessary to prevent damage to the end of the bridge deck and backwall from construction equipment, an appropriate method of protection approved by the Engineer shall be provided by the Bridge Contractor at no extra cost to the State.

Abutment Footing Details

Correction 04-14: Added Concrete Quantity Table & Referral Note to Summary Quantity Sheet. Removed Design Bearing Note for Abut. Piling from Abutment Notes.
Revised 05-2026: In "Part Section A-A", changed 8g1 bar edge of abutment offset dimension to 3 3/4" (was 3"), and changed spacing to 2 Spaces at 8 1/2" (was 2 Spaces at 9"). Added "Control Point" text.
BTIntegralBridges.dgn - 2084-BTB - Issued 02-08. This Sheet Re-Issued 11-2023. Sheet Format Update.

FILE NO.	ENGLISH	DESIGN TEAM	"BTB" Beams - Integral Abutment Details - (R,A.) 15°01 - 30° Skew	Standard Sheet 2084-BTB	COUNTY	PROJECT NUMBER	SHEET NUMBER

8:25:19 AM 6/11/2026 bkloss pw:\\NTPwint1.dot.int.lan:PWMain\Documents\Highway\Bridge\Standards\Bridges\BTIntegralBridges.dgn

Control Point:

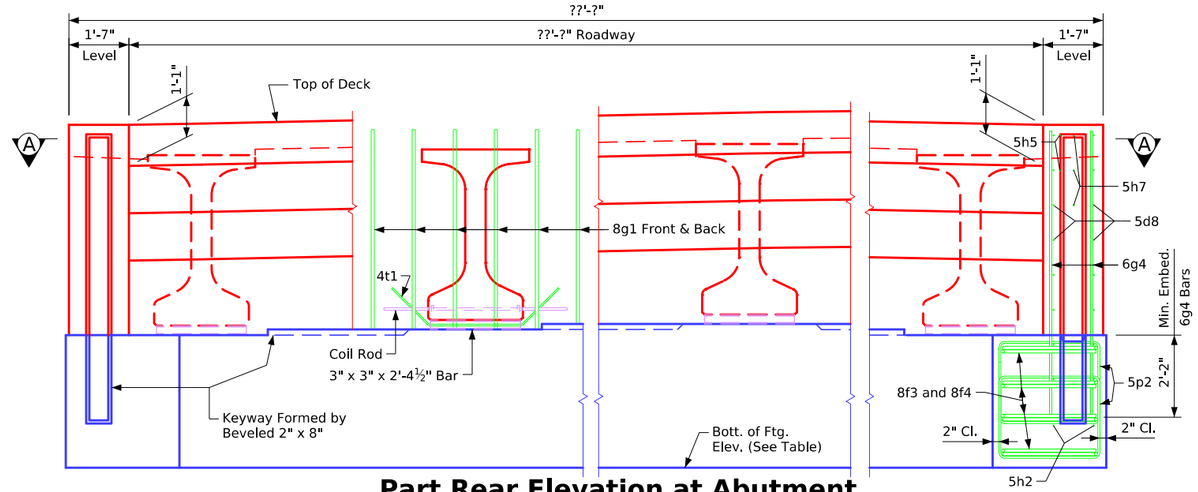

Part Rear Elevation at Abutment

(Wings not Shown)

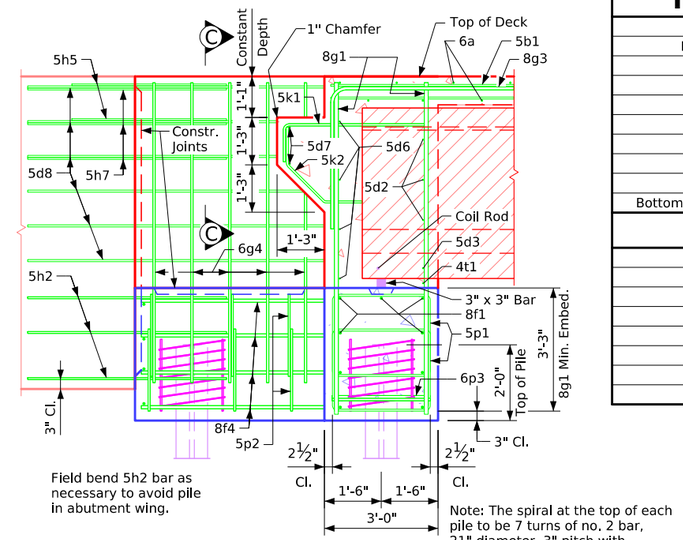

Field bend 5h2 bar as necessary to avoid pile in abutment wing.

Note: The spiral at the top of each pile to be 7 turns of no. 2 bar, 21" diameter, 3" pitch with 3 - L⅞" x ⅞" x ⅛" spacers punched to hold spiral.

Part Section B-B

('BTD' Beam Shown)

Table of Abutment Elevations

Point	? Abutment	? Abutment
Elev. A	???.??	???.??
Bottom Footing Elev.	???.??	???.??

Table of Abutment Steps

Step	? Abutment	? Abutment
a	???.??	???.??

Abutment Concrete Quantity

Location	Quantity
? Abutment Footing	?.?
? Abutment Footing	?.?
Total (Cu. Yds.)	?.?

Notes:
Concrete Quantities are included on the Summary Quantities sheet.
?? - HP ?? x ?? steel bearing piling required at each abutment.
Barrier rail not shown in details.

Note to Designer: Maximum Spacing 1'-4".

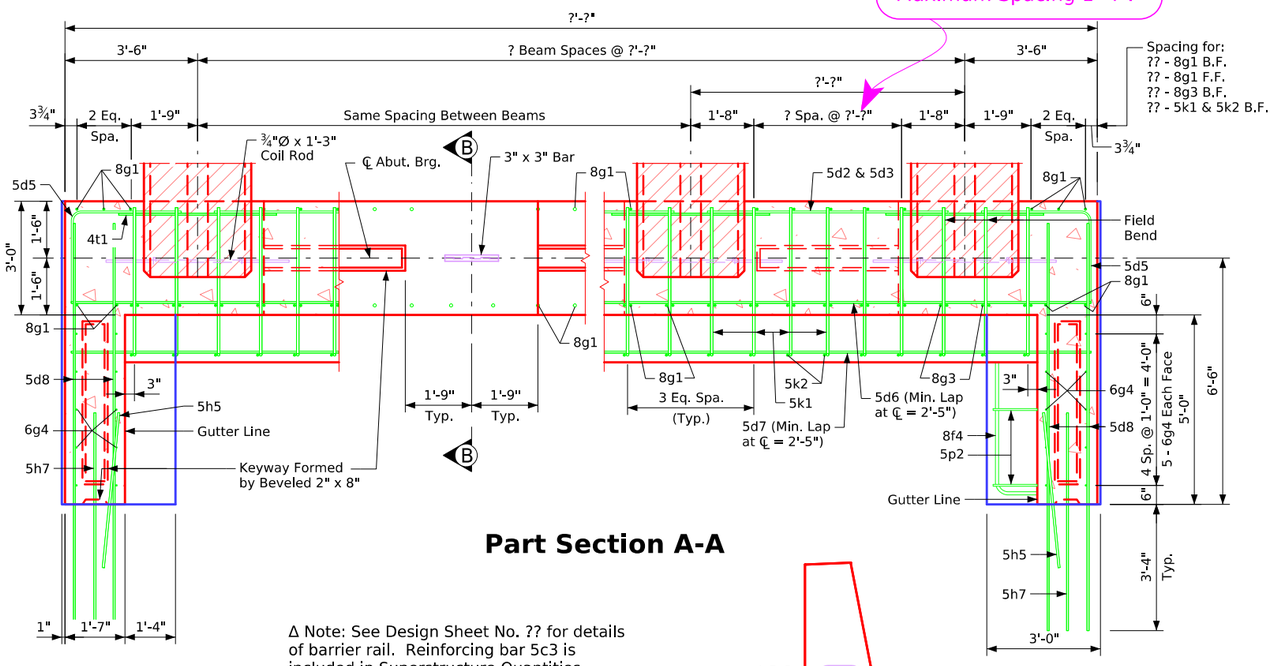

Part Section A-A

Δ Note: See Design Sheet No. ?? for details of barrier rail. Reinforcing bar 5c3 is included in Superstructure Quantities.

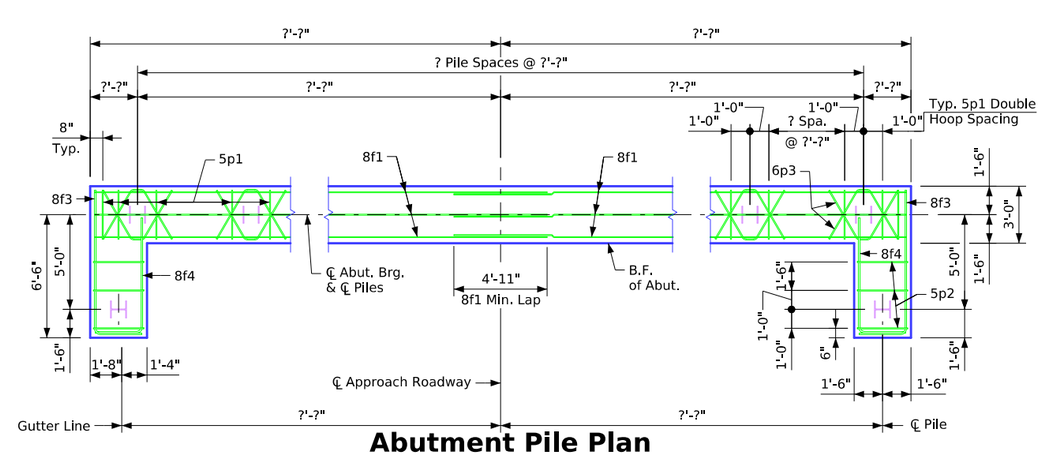

Abutment Pile Plan

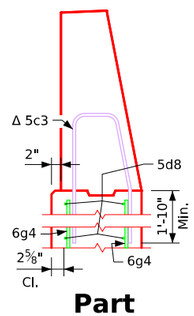

Part Section C-C

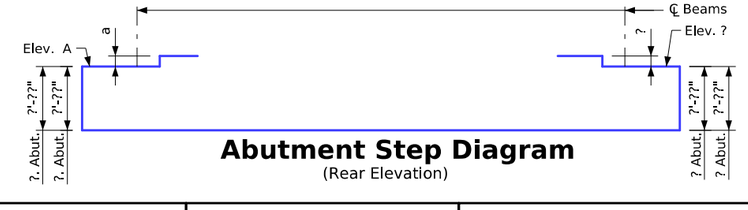

Abutment Step Diagram

(Rear Elevation)

Abutment Notes:

Minimum clear distance from face of concrete to near reinforcing bar is to be 2" unless otherwise noted or shown.

If necessary to prevent damage to the end of the bridge deck and backwall from construction equipment, an appropriate method of protection approved by the Engineer shall be provided by the Bridge Contractor at no extra cost to the State.

Abutment Footing Details

Correction 04-14: Added Concrete Quantity Table & Referral Note to Summary Quantity Sheet. Removed Design Bearing Note for Abut. Piling from Abutment Notes.
Revised 05-2026: In "Part Section A-A", changed 8g1 bar edge of abutment offset dimension to 3 3/4" (was 3") and changed spacing to 2 Equal Spaces (was 2 Spaces at 9"). In "Part Section C-C", flipped/switched orientation of horizontal and vertical bars in outside face of wingwall, and changed wingwall outer face rebar clearance to 2 5/8" (was 3"). Added "Control Point" text.
Revised 06-2026: Added missing beam web hidden lines in "Part Section A-A" detail (was missing in second from right beam) and added "3 Eq. Spa. (Typ.)" dimension of rebar spacing at end of beam.
BTIntegralBridges.dgn - 2085-BTCD - Issued 02-08. This Sheet Re-Issued 11-2023. Sheet Format Update.

FILE NO.	ENGLISH	DESIGN TEAM	"BTC" or "BTD" Bulb Tee Beams - Integral Abutment Details - 0° Skew	Standard Sheet 2085-BTCD	COUNTY	PROJECT NUMBER	SHEET NUMBER

8:25:20 AM 6/11/2026 bkloss pw:\\NTPwint1.dot.int.lan:PWMain\Documents\Highway\Bridge\Standards\Bridges\BTIntegralBridges.dgn

Control Point:

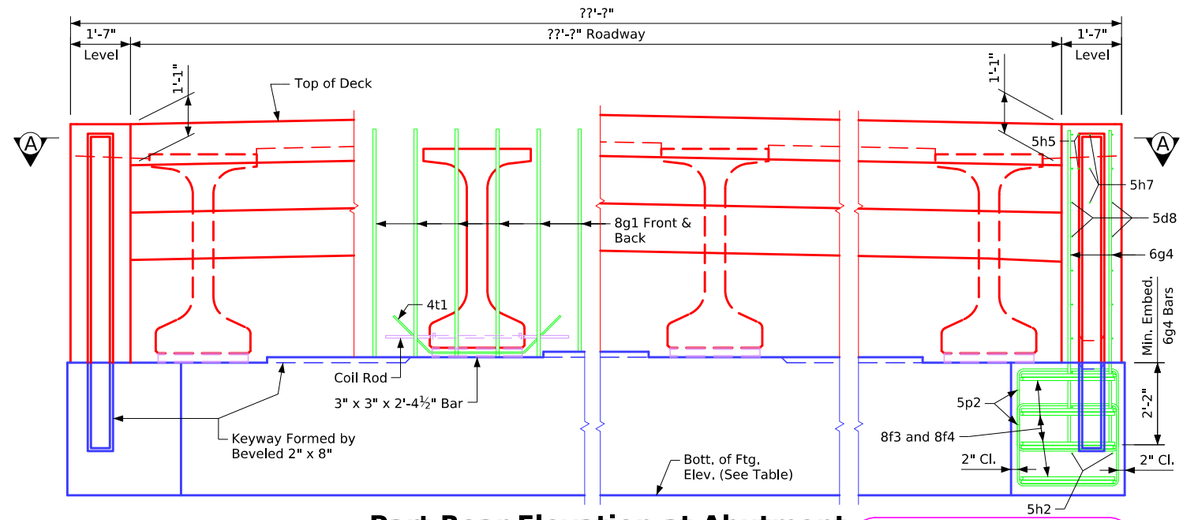

Part Rear Elevation at Abutment

(Wings not Shown)

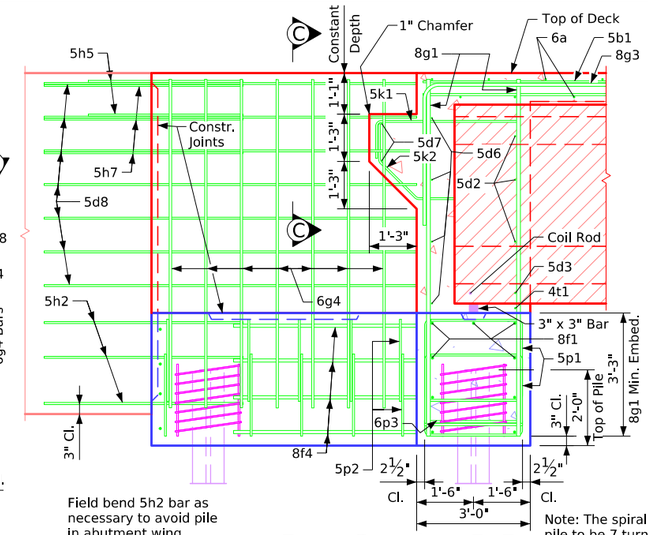

Field bend 5h2 bar as necessary to avoid pile in abutment wing.

Part Section B-B

Note: The spiral at the top of each pile to be 7 turns of no. 2 bar, 21" diameter, 3" pitch with 3 - L⅞" x ⅞" x ⅛" spacers punched to hold spiral.

Table of Abutment Elevations

Point	? Abutment	? Abutment
Elev. A	???.??	???.??
Bottom Footing Elev.	???.??	???.??

Table of Abutment Steps

Step	? Abutment	? Abutment
a	???.??	???.??

Abutment Concrete Quantity

Location	Quantity
? Abutment Footing	?.?
? Abutment Footing	?.?
Total (Cu. Yds.)	?.?

Notes:
Concrete Quantities are included on the Summary Quantities sheet.
?? - HP ?? x ?? steel bearing piling required at each abutment.
Barrier rail not shown in details.

Note to Designer:
Maximum Spacing 1'-4".

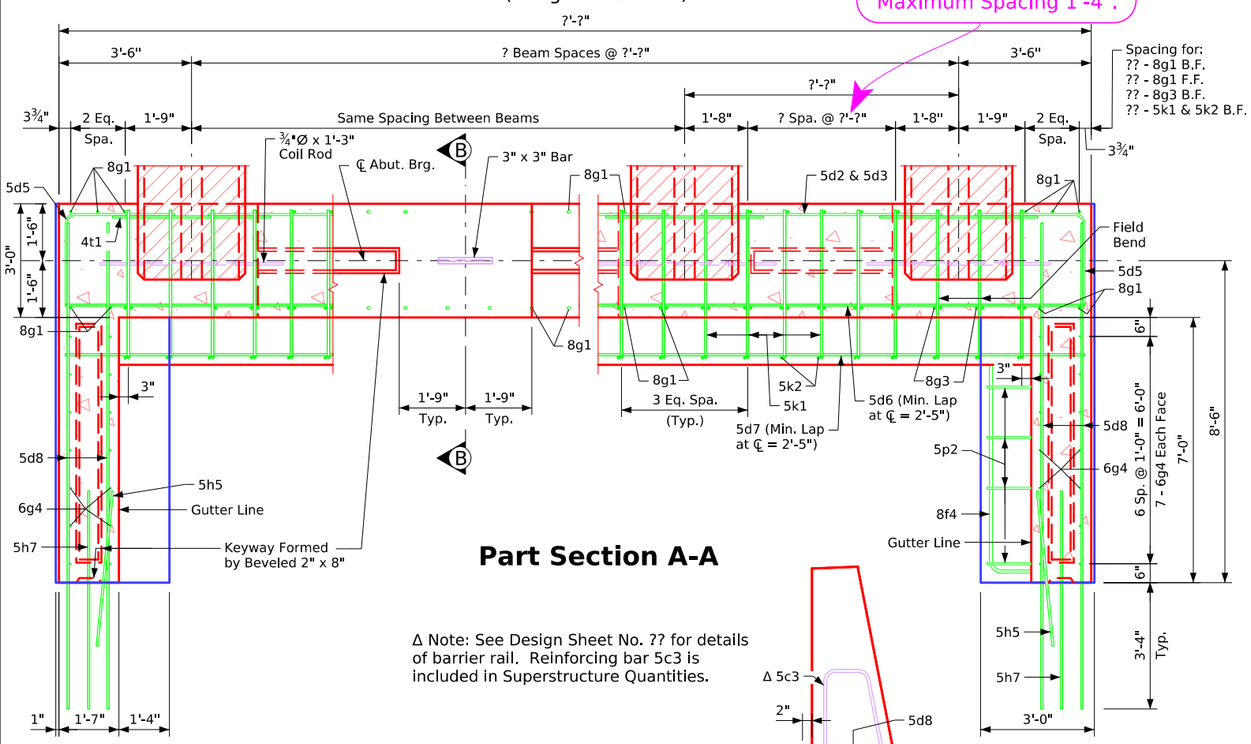

Part Section A-A

Δ Note: See Design Sheet No. ?? for details of barrier rail. Reinforcing bar 5c3 is included in Superstructure Quantities.

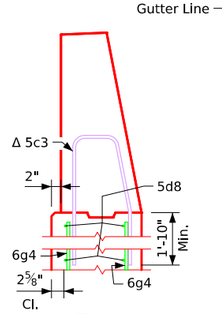

Part Section C-C

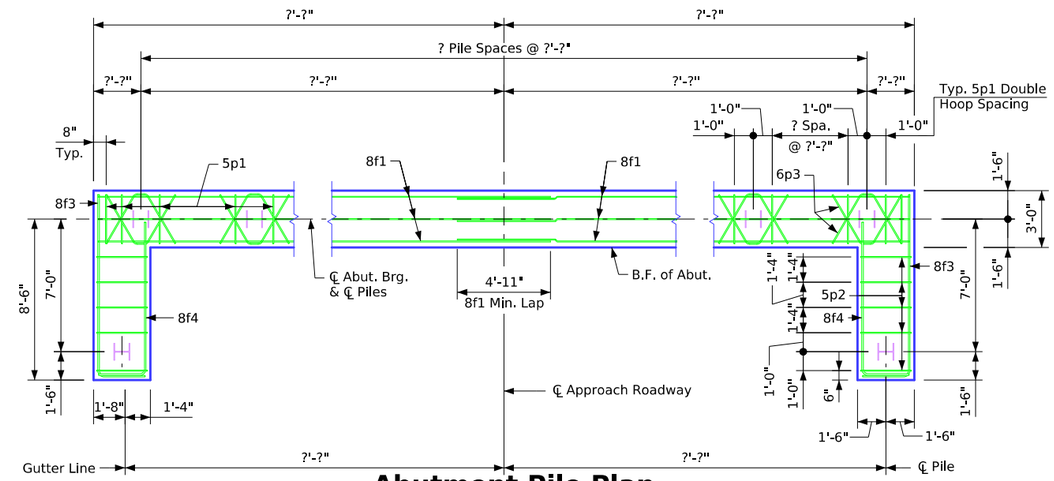

Abutment Pile Plan

Abutment Notes:

Minimum clear distance from face of concrete to near reinforcing bar is to be 2" unless otherwise noted or shown.

If necessary to prevent damage to the end of the bridge deck and backwall from construction equipment, an appropriate method of protection approved by the Engineer shall be provided by the Bridge Contractor at no extra cost to the State.

Abutment Step Diagram

(Rear Elevation)

Abutment Footing Details

Correction 04-14: Added Concrete Quantity Table & Referral Note to Summary Quantity Sheet. Removed Design Bearing Note for Abut. Piling from Abutment Notes.
Revised 05-2026: In "Part Section A-A", changed 8g1 bar edge of abutment offset dimension to 3 3/4" (was 3") and changed spacing to 2 Equal Spaces (was 2 Spaces at 9"). In "Part Section C-C", flipped/switched orientation of horizontal and vertical bars in outside face of wingwall, and changed wingwall outer face rebar clearance to 2 5/8" (was 3"). Added "Control Point" text.
Revised 06-2026: Added missing beam web hidden lines in "Part Section A-A" detail (was missing in second from right beam) and added "3 Eq. Spa. (Typ.)" dimension of rebar spacing at end of beam.
BTIntegralBridges.dgn - 2085-BTE - Issued 02-08. This Sheet Re-Issued 11-2023. Sheet Format Update.

FILE NO.	ENGLISH	DESIGN TEAM	"BTE" Bulb Tee Beams - Integral Abutment Details - 0° Skew	Standard Sheet 2085-BTE	COUNTY	PROJECT NUMBER	SHEET NUMBER

8:25:21 AM 6/11/2026 bkloss pw:\\NTPwint1.dot.int.lan:PWMain\Documents\Highway\Bridge\Standards\Bridges\BTIntegralBridges.dgn

Control Point:

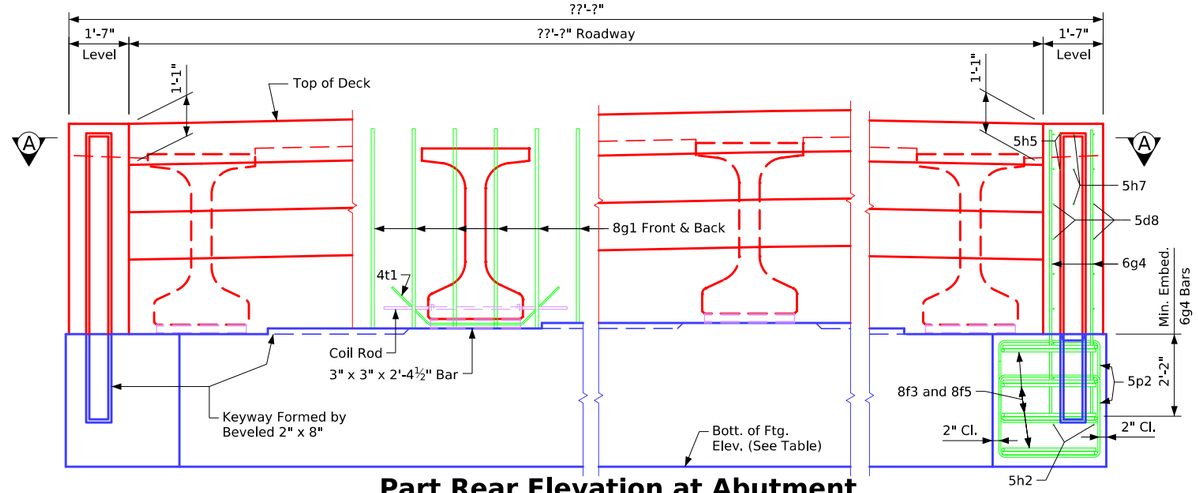

Part Rear Elevation at Abutment
(Wings not Shown)

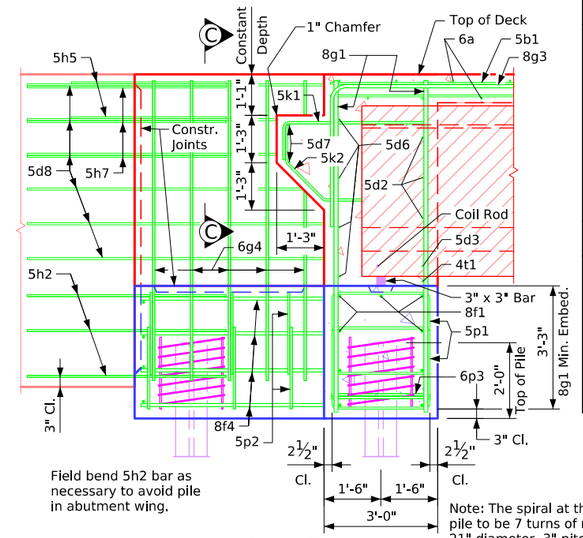

Note: The spiral at the top of each pile to be 7 turns of no. 2 bar, 21" diameter, 3" pitch with 3 - L⅞" x ⅞" x ⅛" spacers punched to hold spiral.

Part Section B-B
('BTD' Beam Shown)

Table of Abutment Elevations

Point	? Abutment	? Abutment
Elev. A	???.??	???.??
Bottom Footing Elev.	???.??	???.??

Table of Abutment Steps

Step	? Abutment	? Abutment
a	???.??	???.??

Abutment Concrete Quantity

Location	Quantity
? Abutment Footing	?.?
? Abutment Footing	?.?
Total (Cu. Yds.)	?.?

Notes:
Concrete Quantities are included on the Summary Quantities sheet.
?? - HP ?? x ?? steel bearing piling required at each abutment.
Barrier rail not shown in details.

Note to Designer:
Maximum Spacing 1'-4".

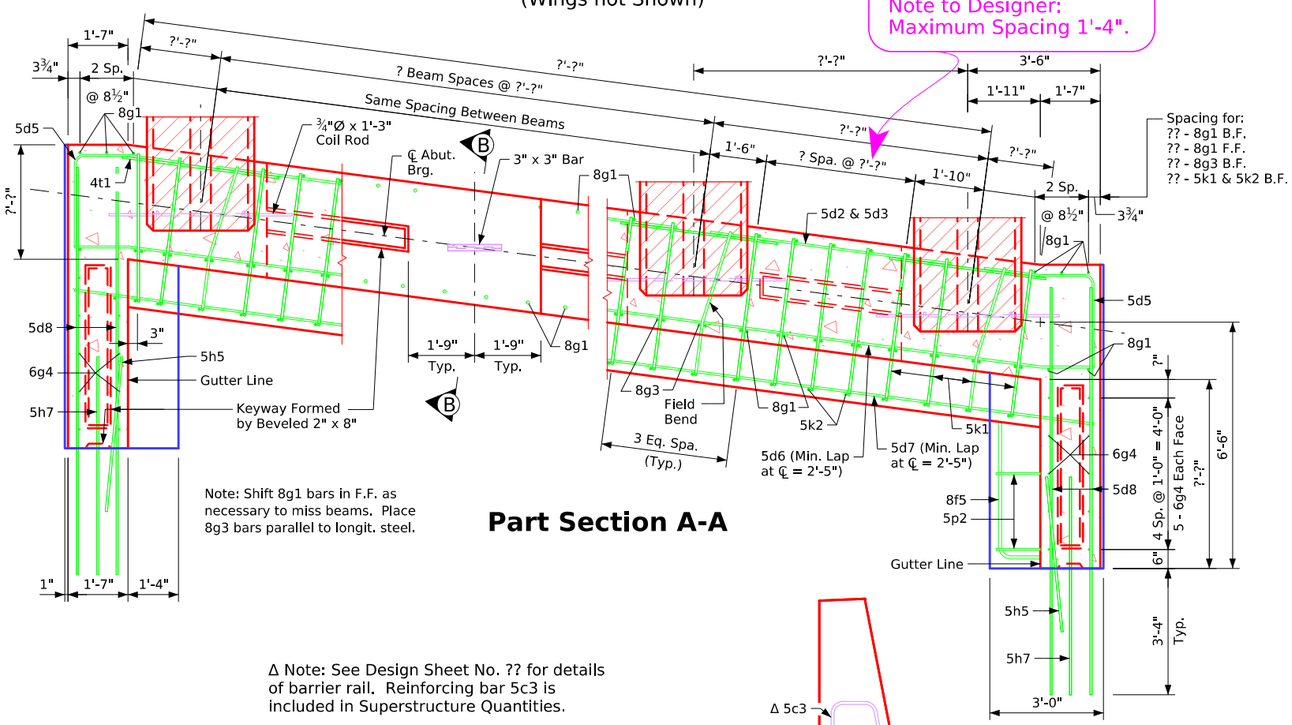

Note: Shift 8g1 bars in F.F. as necessary to miss beams. Place 8g3 bars parallel to longit. steel.

Part Section A-A

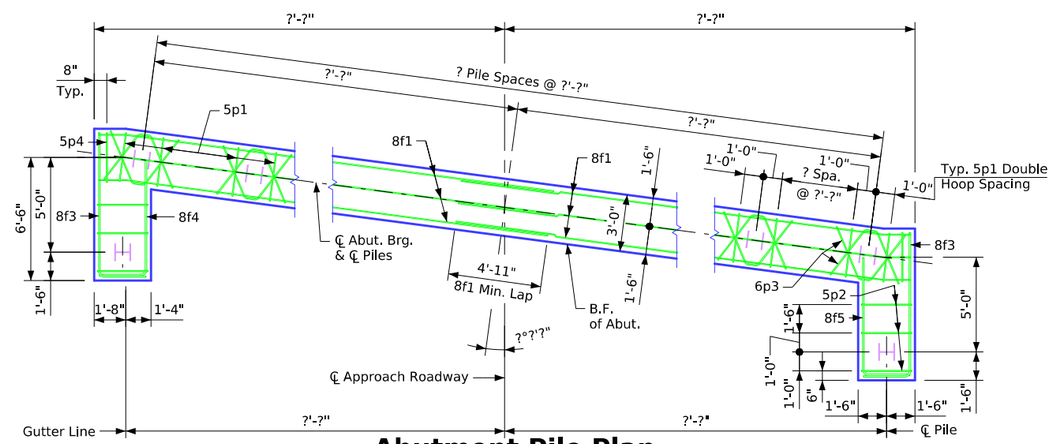

Abutment Pile Plan

Δ Note: See Design Sheet No. ?? for details of barrier rail. Reinforcing bar 5c3 is included in Superstructure Quantities.

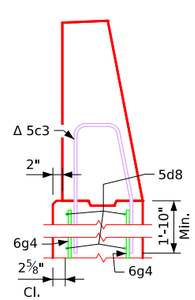

Part Section C-C

Abutment Notes:

Minimum clear distance from face of concrete to near reinforcing bar is to be 2" unless otherwise noted or shown.

If necessary to prevent damage to the end of the bridge deck and backwall from construction equipment, an appropriate method of protection approved by the Engineer shall be provided by the Bridge Contractor at no extra cost to the State.

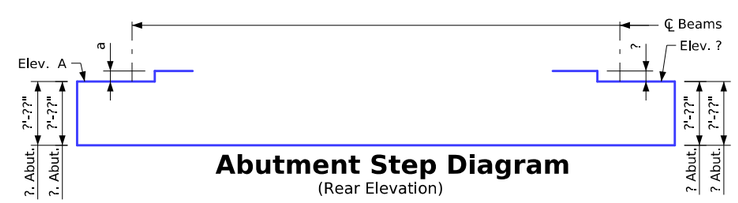

Abutment Step Diagram
(Rear Elevation)

Abutment Footing Details

FILE NO.	ENGLISH	DESIGN TEAM	"BTC" or "BTD" Beams - Integral Abutment Details - (L,A,) 0°0' - 7°30' Skew	Standard Sheet 2086-BTCD	COUNTY	PROJECT NUMBER	SHEET NUMBER

8:25:21 AM 6/11/2026 bkloss pw:\\NTPwint1.dot.int.lan:PWMain\Documents\Highway\Bridge\Standards\Bridges\BTIntegralBridges.dgn

Correction 04-14: Added Concrete Quantity Table & Referral Note to Summary Quantity Sheet. Removed Design Bearing Note for Abut. Piling from Abutment Notes.
Revised 05-2026: In "Part Section A-A", changed 8g1 bar edge of abutment offset dimension to 3 3/4" (was 3") and changed spacing to 2 Spaces at 8 1/2" (was 2 Spaces at 9"). In "Part Section C-C", flipped/switched orientation of horizontal and vertical bars in outside face of wingwall, and changed wingwall outer face rebar clearance to 2 5/8" (was 3"). Added "Control Point" text.
Revised 06-2026: In "Part Section A-A", added "3 Eq. Spa. (Typ.)" dimension of rebar spacing at end of beam.
BTIntegralBridges.dgn - 2086-BTCD - Issued 02-08. This Sheet Re-Issued 11-2023. Sheet Format Update.

Control Point:

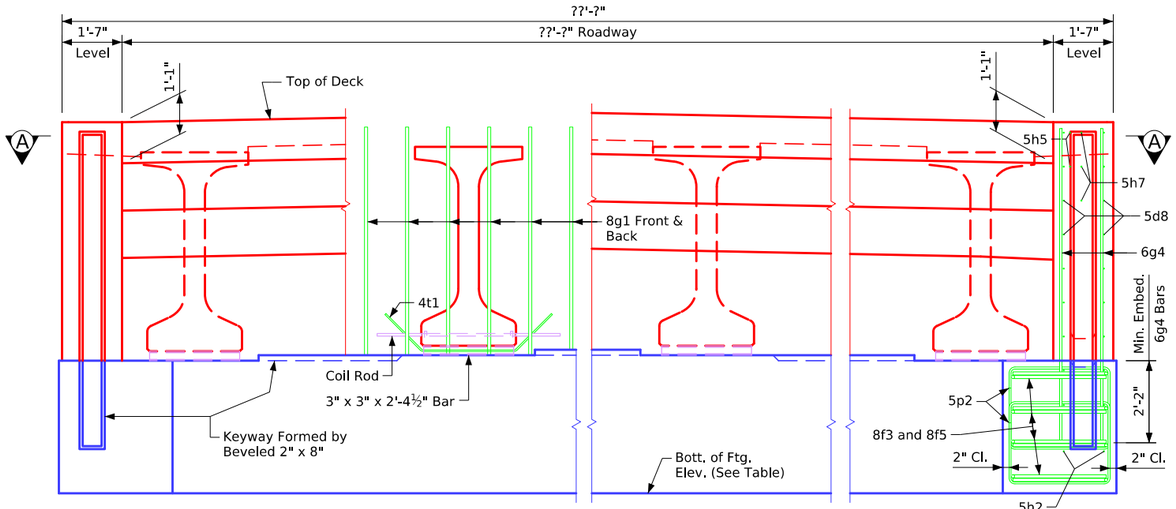

Part Rear Elevation at Abutment

(Wings not Shown)

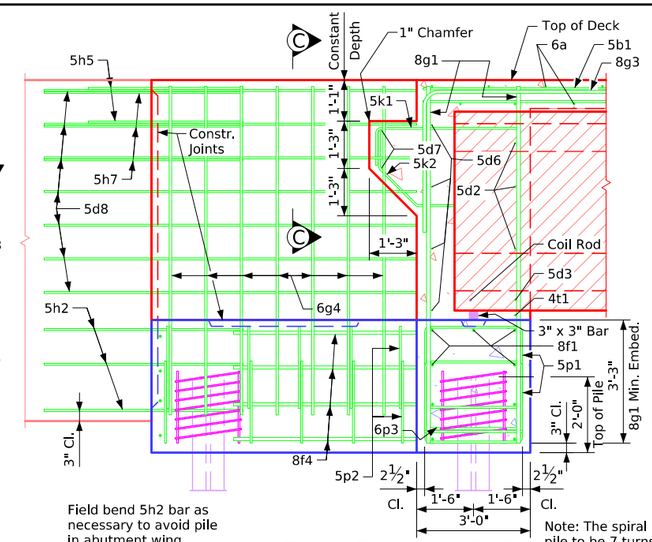

Field bend 5h2 bar as necessary to avoid pile in abutment wing.

Part Section B-B

Note: The spiral at the top of each pile to be 7 turns of no. 2 bar, 21" diameter, 3" pitch with 3 - L⅞" x ⅞" x ⅛" spacers punched to hold spiral.

Table of Abutment Elevations

Point	? Abutment	? Abutment
Elev. A	???.??	???.??
Bottom Footing Elev.	???.??	???.??

Table of Abutment Steps

Step	? Abutment	? Abutment
a	???.??	???.??

Abutment Concrete Quantity

Location	Quantity
? Abutment Footing	?.?
? Abutment Footing	?.?
Total (Cu. Yds.)	?.?

Notes:

Concrete Quantities are included on the Summary Quantities sheet.

?? - HP ?? x ?? steel bearing piling required at each abutment.

Barrier rail not shown in details.

Note to Designer: Maximum Spacing 1'-4".

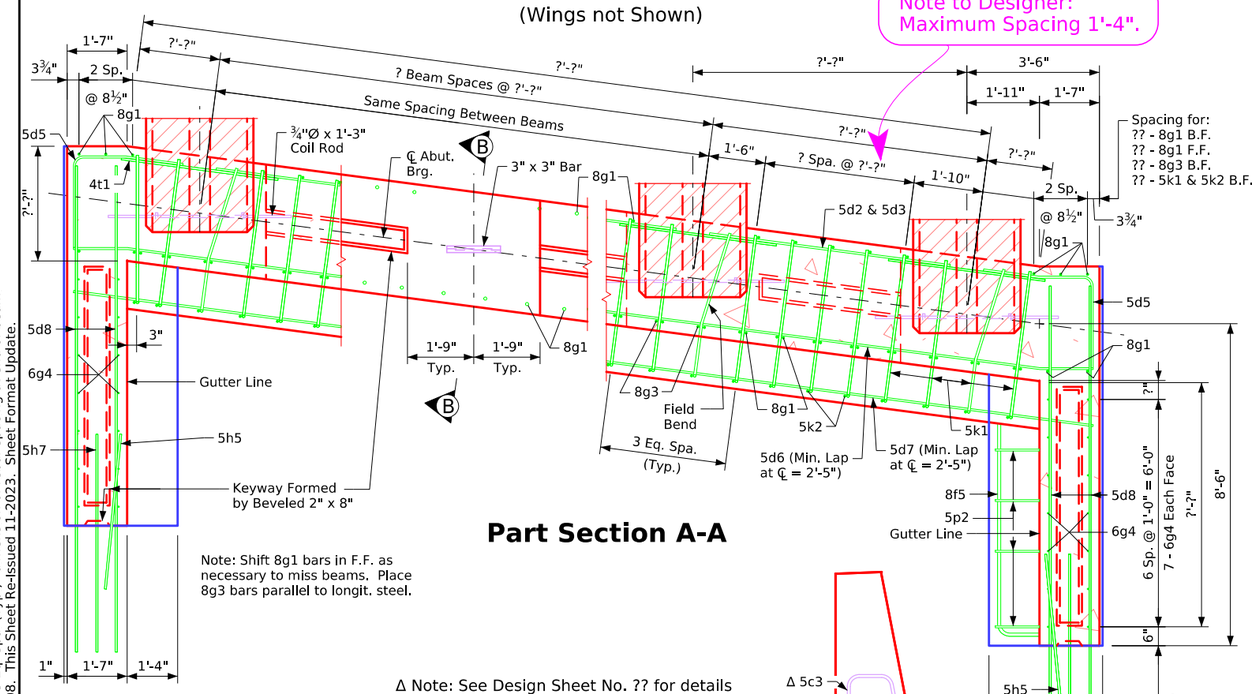

Part Section A-A

Note: Shift 8g1 bars in F.F. as necessary to miss beams. Place 8g3 bars parallel to longit. steel.

Δ Note: See Design Sheet No. ?? for details of barrier rail. Reinforcing bar 5c3 is included in Superstructure Quantities.

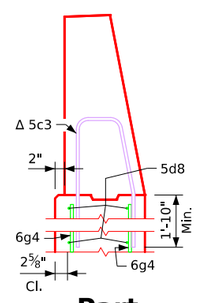

Part Section C-C

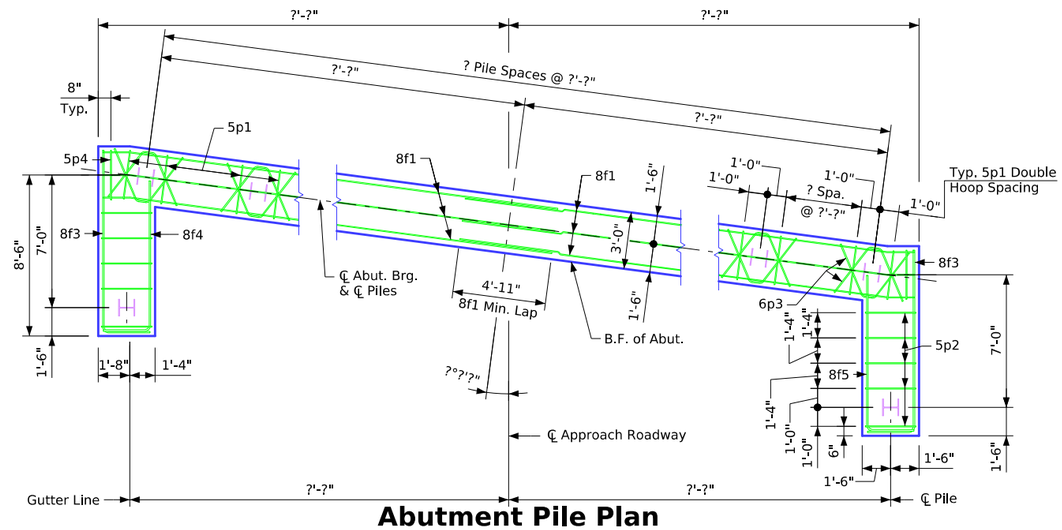

Abutment Pile Plan

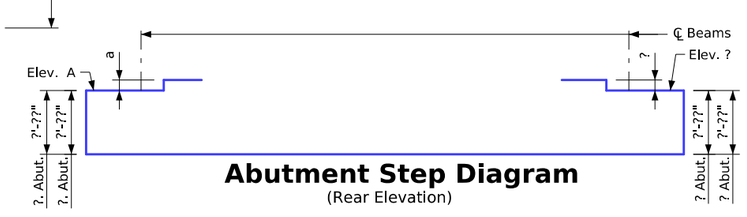

Abutment Step Diagram

(Rear Elevation)

Abutment Notes:

Minimum clear distance from face of concrete to near reinforcing bar is to be 2" unless otherwise noted or shown.

If necessary to prevent damage to the end of the bridge deck and backwall from construction equipment, an appropriate method of protection approved by the Engineer shall be provided by the Bridge Contractor at no extra cost to the State.

Abutment Footing Details

Correction 04-14; Added Concrete Quantity Table & Referral Note to Summary Quantity Sheet. Removed Design Bearing Note for Abut. Piling from Abutment Notes.
Revised 05-2026: In "Part Section A-A", changed 8g1 bar edge of abutment offset dimension to 3 3/4" (was 3") and changed spacing to 2 Spaces at 8 1/2" (was 2 Spaces at 9"). In "Part Section C-C", flipped/switched orientation of horizontal and vertical bars in outside face of wingwall, and changed wingwall outer face rebar clearance to 2 5/8" (was 3"). Added "Control Point" text.
Revised 06-2026: In "Part Section A-A", added "3 Eq. Spa. (Typ.)" dimension of rebar spacing at end of beam.
BTIntegralBridges.dgn - 2086-BTE - Issued 02-08. This Sheet Re-Issued 11-2023. Sheet Format Update.

FILE NO.	ENGLISH	DESIGN TEAM	"BTE" Beams - Integral Abutment Details - (L.A.) 0°01' - 7°30' Skew	Standard Sheet 2086-BTE	COUNTY	PROJECT NUMBER	SHEET NUMBER

8:25:22 AM 6/11/2026 bkloss pw:\\NTPwint1.dot.int.lan:PWMain\Documents\Highway\Bridge\Standards\Bridges\BTIntegralBridges.dgn

Correction 04-14: Added Concrete Quantity Table & Referral Note to Summary Quantity Sheet. Removed Design Bearing Note for Abut. Piling from Abutment Notes.
Revised 05-2026: In "Part Section A-A", changed 8g1 bar edge of abutment offset dimension to 3 3/4" (was 3") and changed spacing to 2 Spaces at 8 1/2" (was 2 Spaces at 9"). In "Part Section C-C", flipped/switched orientation of horizontal and vertical bars in outside face of wingwall, and changed wingwall outer face rebar clearance to 2 5/8" (was 3"). Added "Control Point" text.
Revised 06-2026: In "Part Section A-A", corrected location of "3 Eq. Spa. (Typ.)" dimension of rebar spacing at end of beam and adjusted section cut to accommodate showing the rebar for this.
BTIntegralBridges.dgn - 2087-BTCD - Issued 02-08. This Sheet Re-Issued 11-2023. Sheet Format Update.

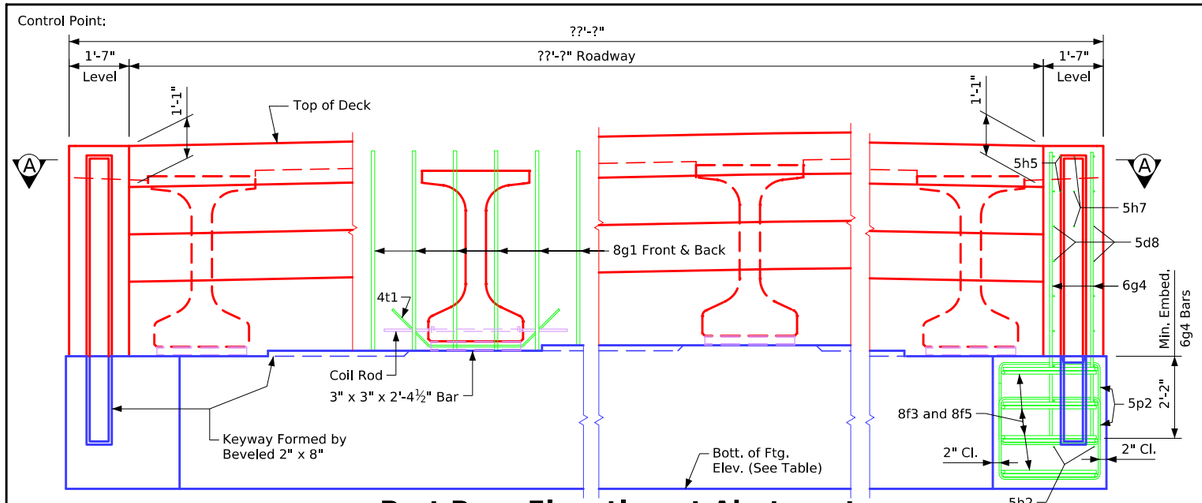

Part Rear Elevation at Abutment
(Wings not Shown)

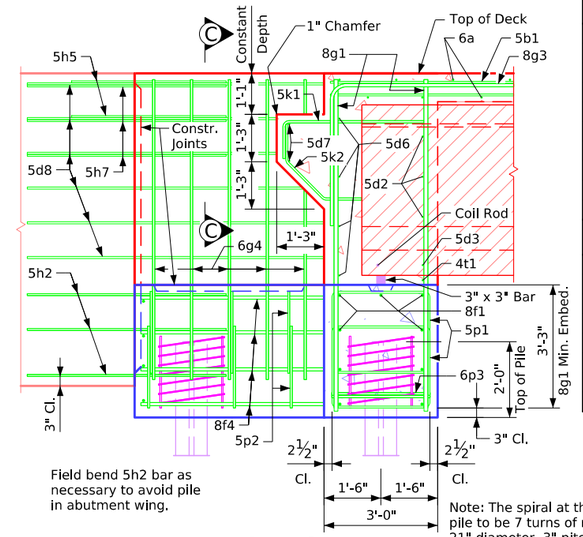

Part Section B-B
('BTD' Beam Shown)

Table of Abutment Elevations

Point	? Abutment	? Abutment
Elev. A	???.??	???.??
Bottom Footing Elev.	???.??	???.??

Table of Abutment Steps

Step	? Abutment	? Abutment
a	???.??	???.??

Abutment Concrete Quantity

Location	Quantity
? Abutment Footing	?.?
? Abutment Footing	?.?
Total (Cu. Yds.)	?.?

Notes:
Concrete Quantities are included on the Summary Quantities sheet.
?? - HP ?? x ?? steel bearing piling required at each abutment.
Barrier rail not shown in details.

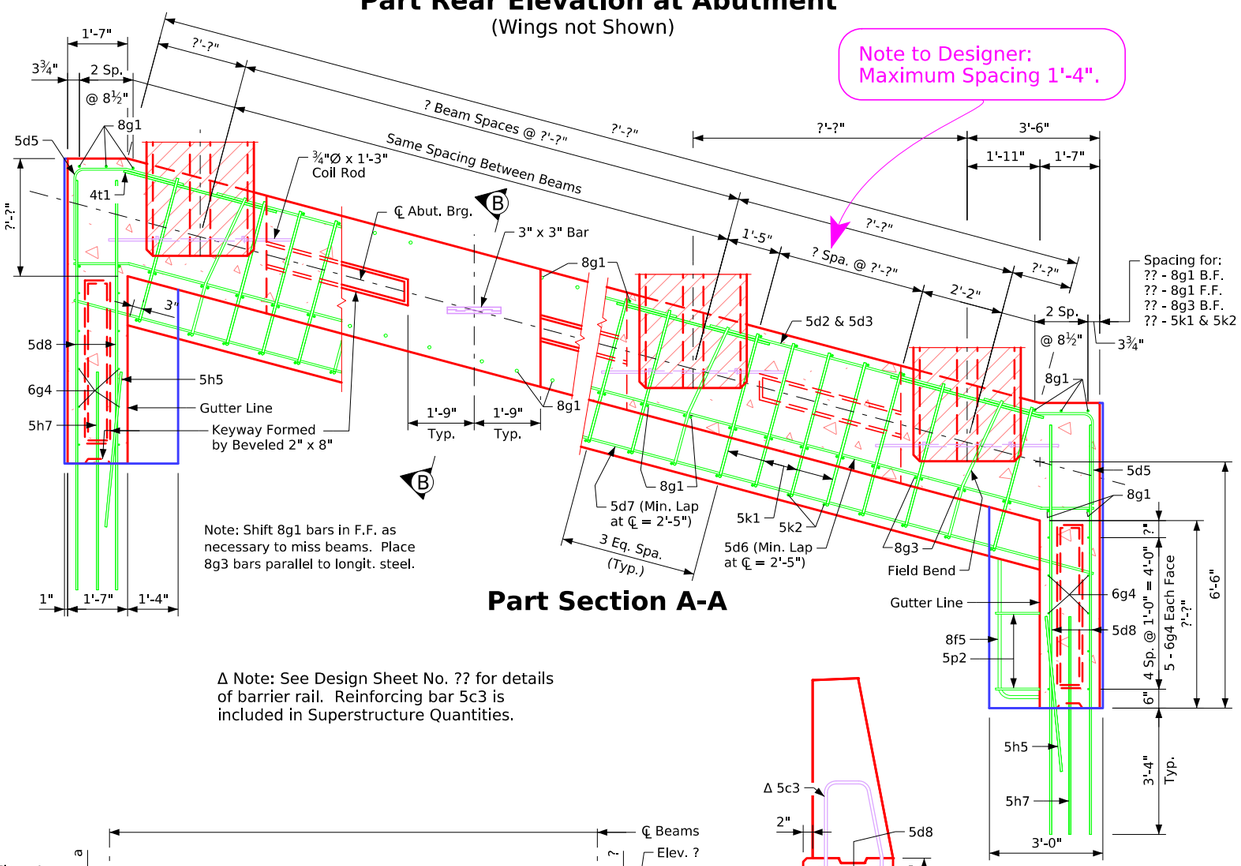

Part Section A-A

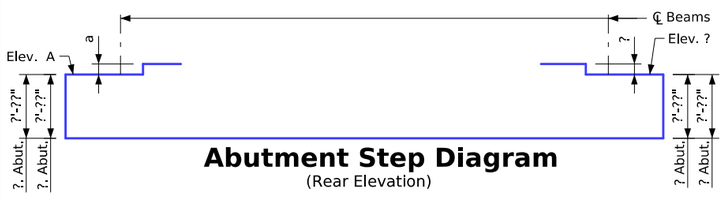

Abutment Step Diagram
(Rear Elevation)

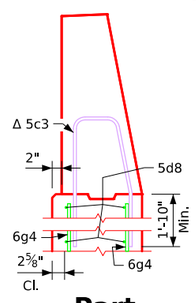

Part Section C-C

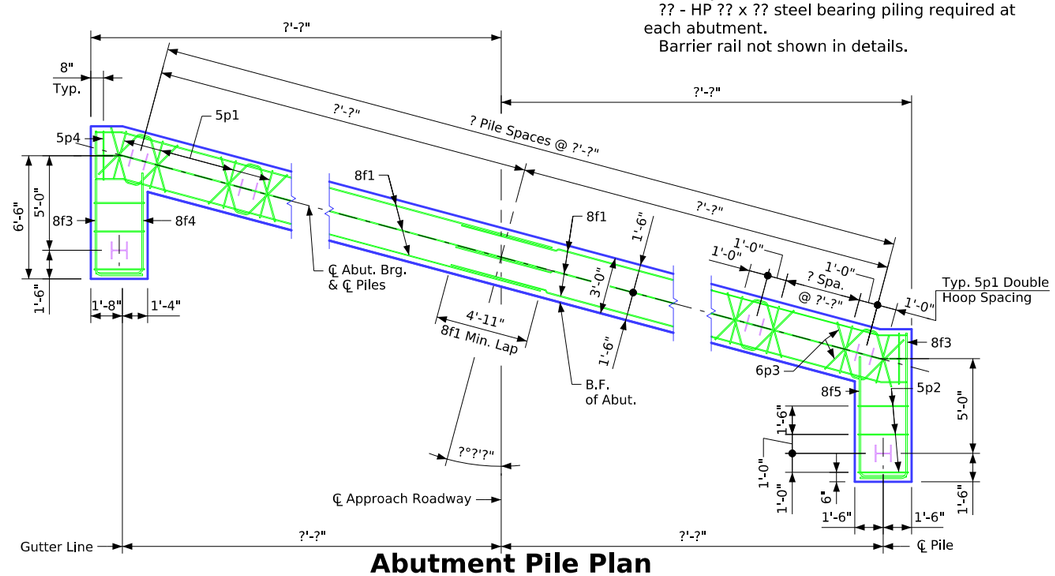

Abutment Pile Plan

Abutment Notes:

Minimum clear distance from face of concrete to near reinforcing bar is to be 2" unless otherwise noted or shown.

If necessary to prevent damage to the end of the bridge deck and backwall from construction equipment, an appropriate method of protection approved by the Engineer shall be provided by the Bridge Contractor at no extra cost to the State.

Abutment Footing Details

FILE NO.	ENGLISH	DESIGN TEAM	"BTC" or "BTD" Beams - Integral Abutment Details - (L.A.) 7°31' - 15° Skew	Standard Sheet 2087-BTCD	COUNTY	PROJECT NUMBER	SHEET NUMBER

8:25:22 AM 6/11/2026 bkloss pw:\\NTPwint1.dot.int.lan:PWMain\Documents\Highway\Bridge\Standards\Bridges\BTIntegralBridges.dgn

Correction 04-14: Added Concrete Quantity Table & Referral Note to Summary Quantity Sheet. Removed Design Bearing Note for Abut. Piling from Abutment Notes.
Revised 05-2026: In "Part Section A-A", changed 8g1 bar edge of abutment offset dimension to 3 3/4" (was 3") and changed spacing of 8g1 spacing to 2 Spaces at 8 1/2" (was 2 Spaces at 9"). In "Part Section C-C", flipped/switched orientation of horizontal and vertical bars in outside face of wingwall, and changed wingwall outer face rebar clearance to 2 5/8" (was 3"). Added "Control Point" text.
Revised 06-2026: In "Part Section A-A", corrected location of "3 Eq. Spa. (Typ.)" dimension of rebar spacing at end of beam and adjusted section cut to accommodate showing the rebar for this.
BTIntegralBridges.dgn - 2087-BTE - Issued 02-08. This Sheet Re-Issued 11-2023. Sheet Format Update.

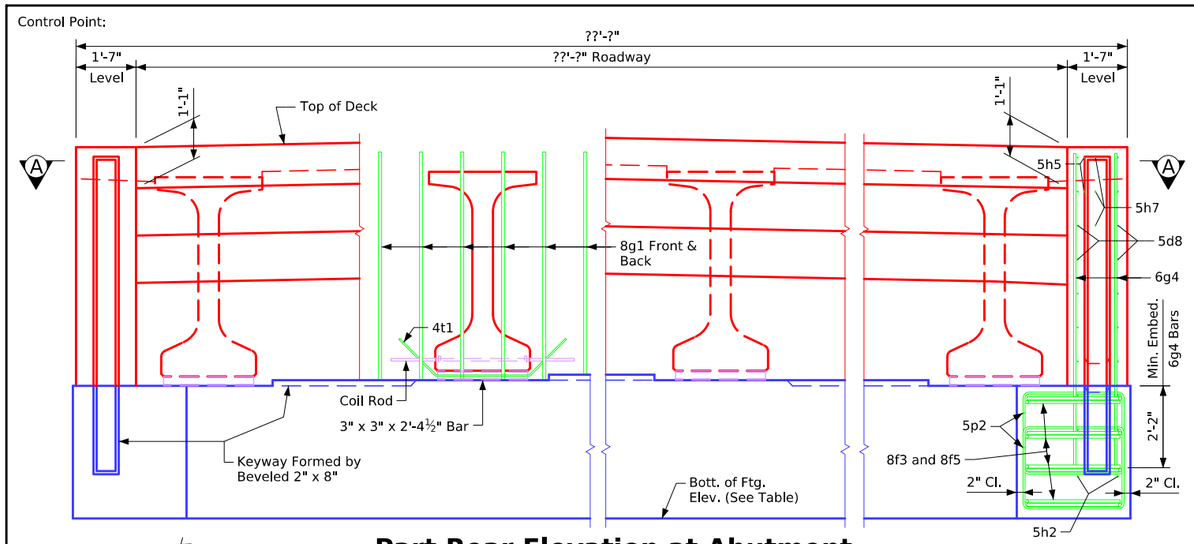

Part Rear Elevation at Abutment
(Wings not Shown)

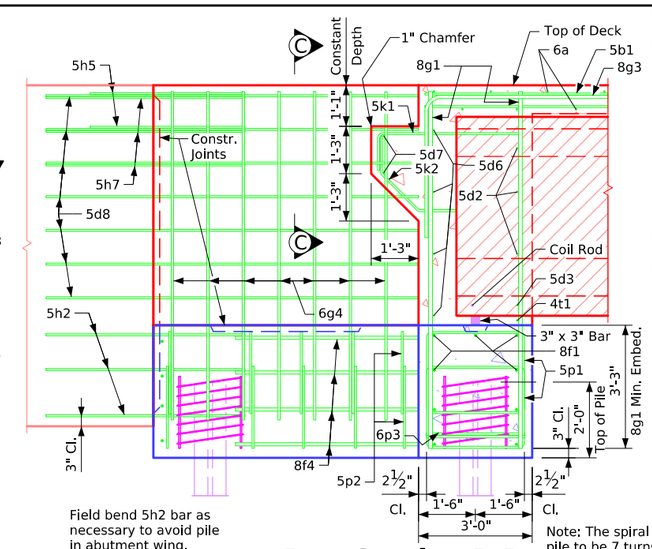

Field bend 5h2 bar as necessary to avoid pile in abutment wing.

Part Section B-B

Note: The spiral at the top of each pile to be 7 turns of no. 2 bar, 21" diameter, 3" pitch with 3 - L⅞" x ⅞" x ⅛" spacers punched to hold spiral.

Table of Abutment Elevations

Point	? Abutment	? Abutment
Elev. A	???.??	???.??
Bottom Footing Elev.	???.??	???.??

Table of Abutment Steps

Step	? Abutment	? Abutment
a	???.??	???.??

Abutment Concrete Quantity

Location	Quantity
? Abutment Footing	?.?
? Abutment Footing	?.?
Total (Cu. Yds.)	?.?

Notes:
Concrete Quantities are included on the Summary Quantities sheet.
?? - HP ?? x ?? steel bearing piling required at each abutment.
Barrier rail not shown in details.

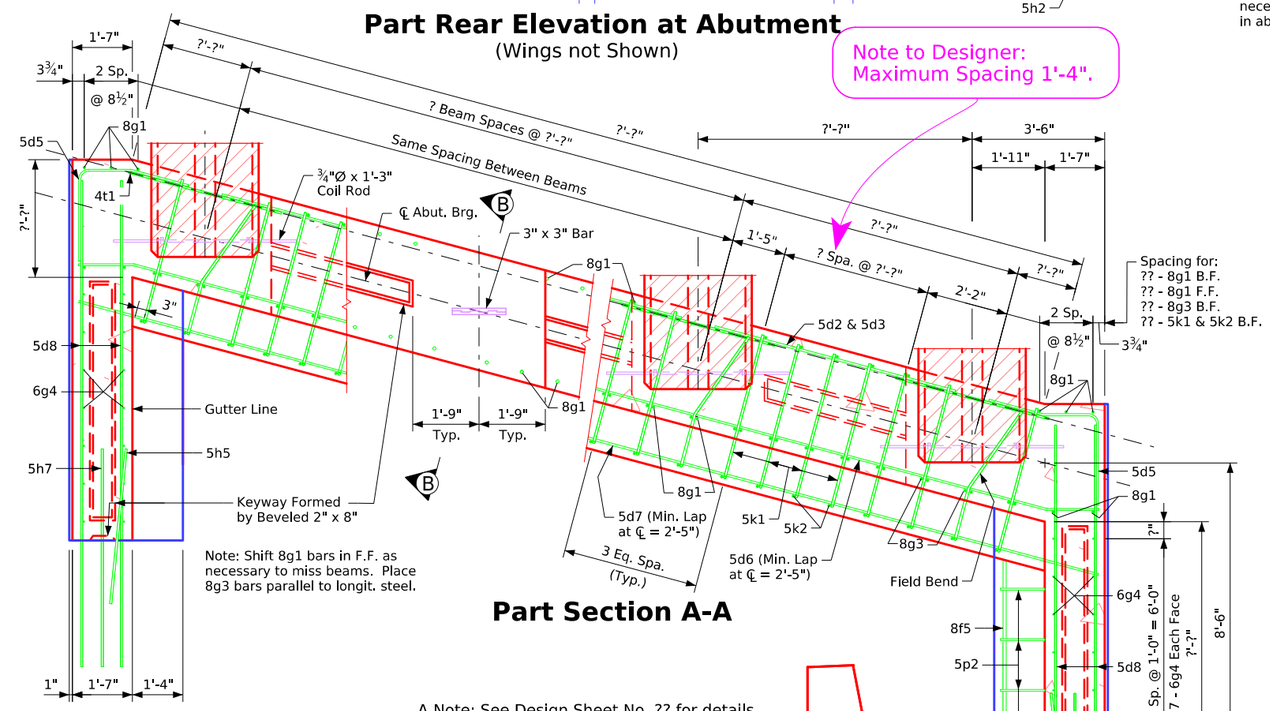

Part Section A-A

Δ Note: See Design Sheet No. ?? for details of barrier rail. Reinforcing bar 5c3 is included in Superstructure Quantities.

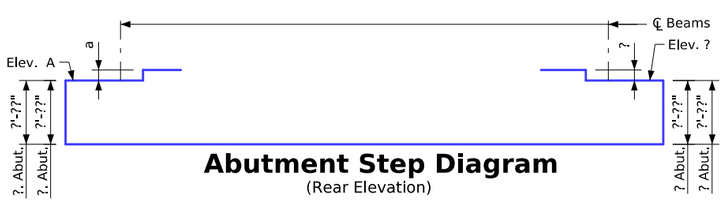

Abutment Step Diagram
(Rear Elevation)

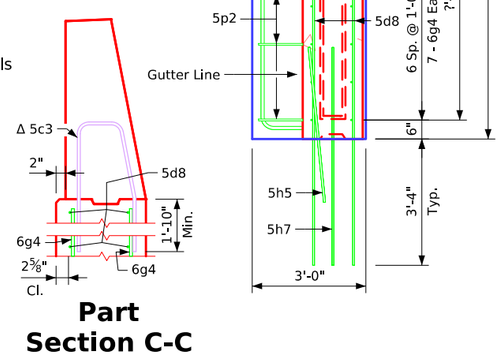

Part Section C-C

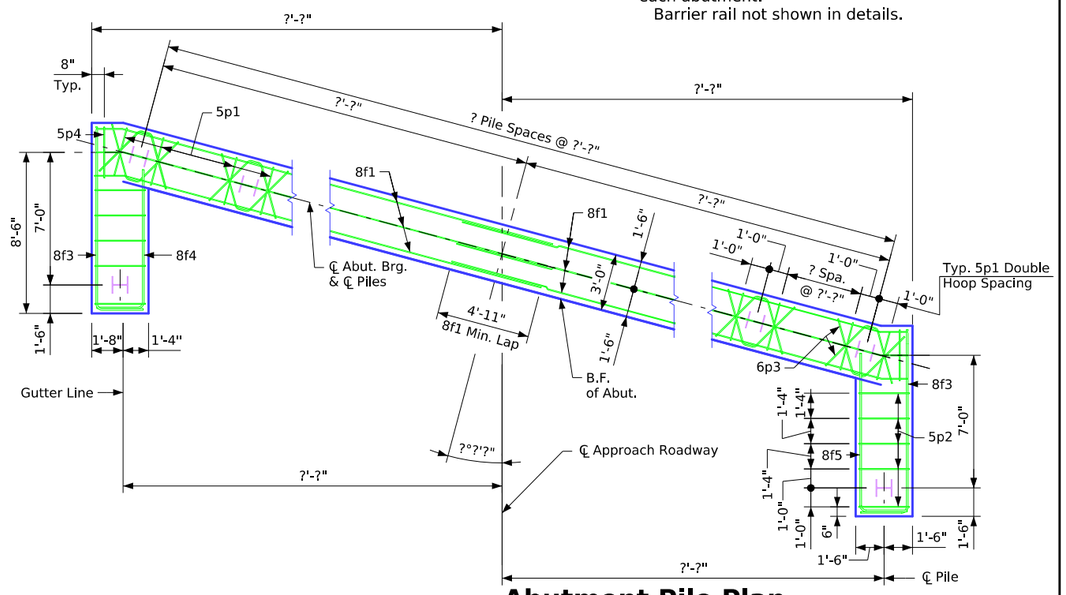

Abutment Pile Plan

Abutment Notes:

Minimum clear distance from face of concrete to near reinforcing bar is to be 2" unless otherwise noted or shown.

If necessary to prevent damage to the end of the bridge deck and backwall from construction equipment, an appropriate method of protection approved by the Engineer shall be provided by the Bridge Contractor at no extra cost to the State.

Abutment Footing Details

FILE NO.	ENGLISH	DESIGN TEAM	"BTE" Beams - Integral Abutment Details - (L,A,) 7°31' - 15° Skew	Standard Sheet 2087-BTE	COUNTY	PROJECT NUMBER	SHEET NUMBER

8:25:23 AM 6/11/2026 bkloss pw:\\NTPwint1.dot.int.lan:PWMain\Documents\Highway\Bridge\Standards\Bridges\BTIntegralBridges.dgn

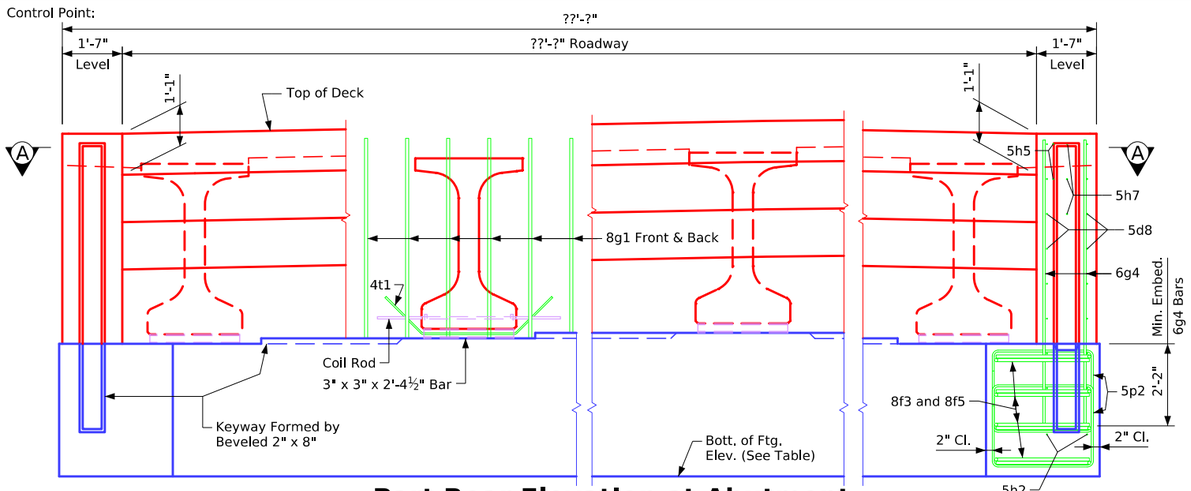

Part Rear Elevation at Abutment

(Wings not Shown)

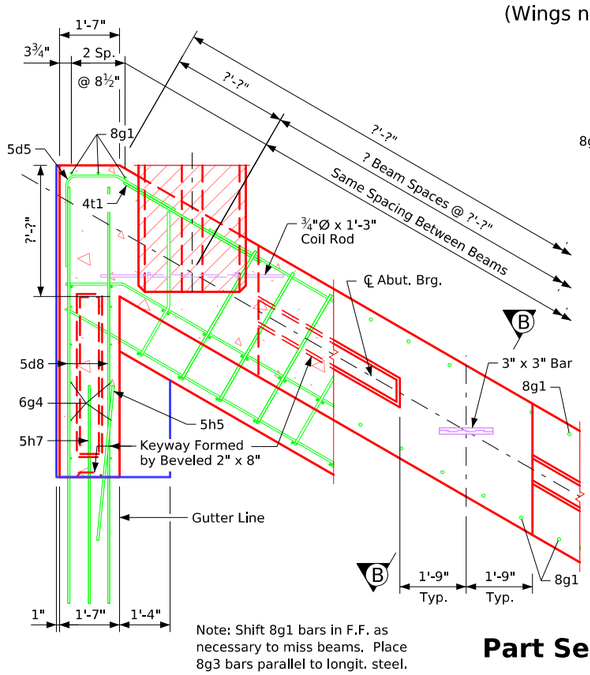

Note: Shift 8g1 bars in F.F. as necessary to miss beams. Place 8g3 bars parallel to longit. steel.

Part Section A-A

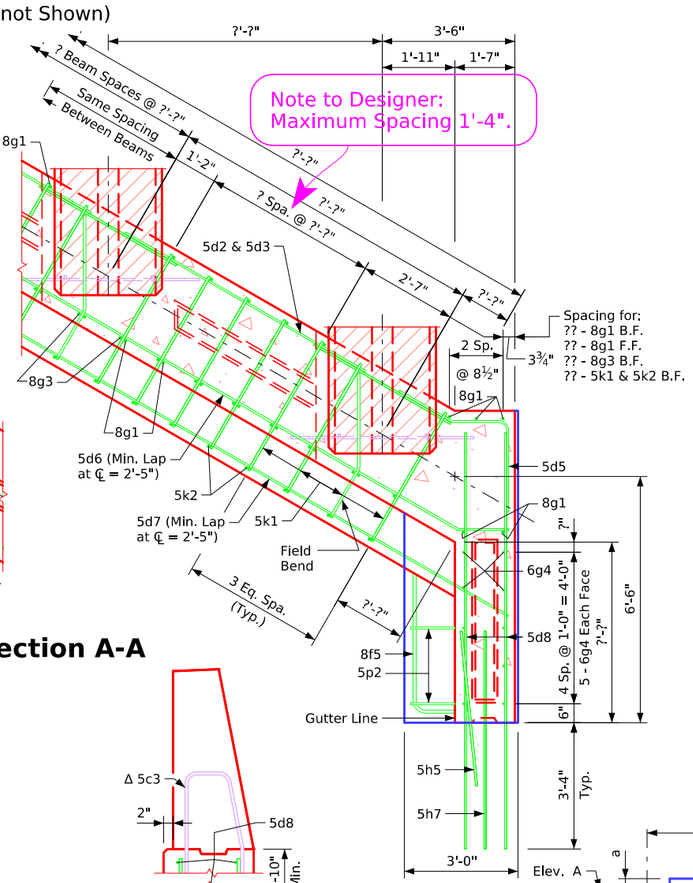

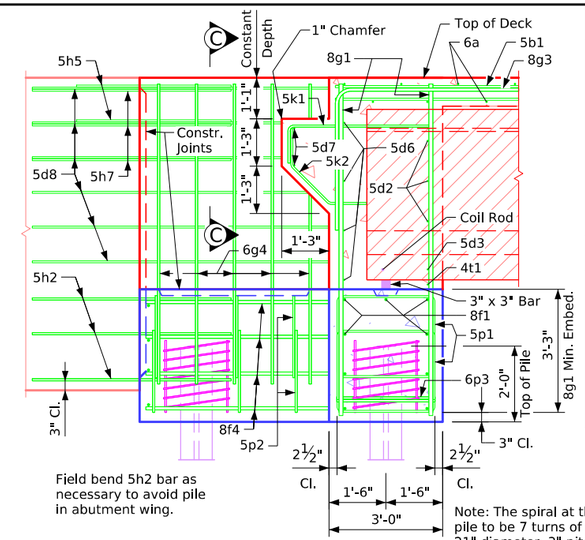

Field bend 5h2 bar as necessary to avoid pile in abutment wing.

Note: The spiral at the top of each pile to be 7 turns of no. 2 bar, 21" diameter, 3" pitch with 3 - L⅞" x ⅞" x ⅛" spacers punched to hold spiral.

Part Section B-B

('BTD' Beam Shown)

Table of Abutment Elevations

Point	? Abutment	? Abutment
Elev. A	???.??	???.??
Bottom Footing Elev.	???.??	???.??

Table of Abutment Steps

Step	? Abutment	? Abutment
a	???.??	???.??

Abutment Concrete Quantity

Location	Quantity
? Abutment Footing	?.?
? Abutment Footing	?.?
Total (Cu. Yds.)	?.?

Notes:
Concrete Quantities are included on the Summary Quantities sheet.
?? - HP ?? x ?? steel bearing piling required at each abutment.
Barrier rail not shown in details.

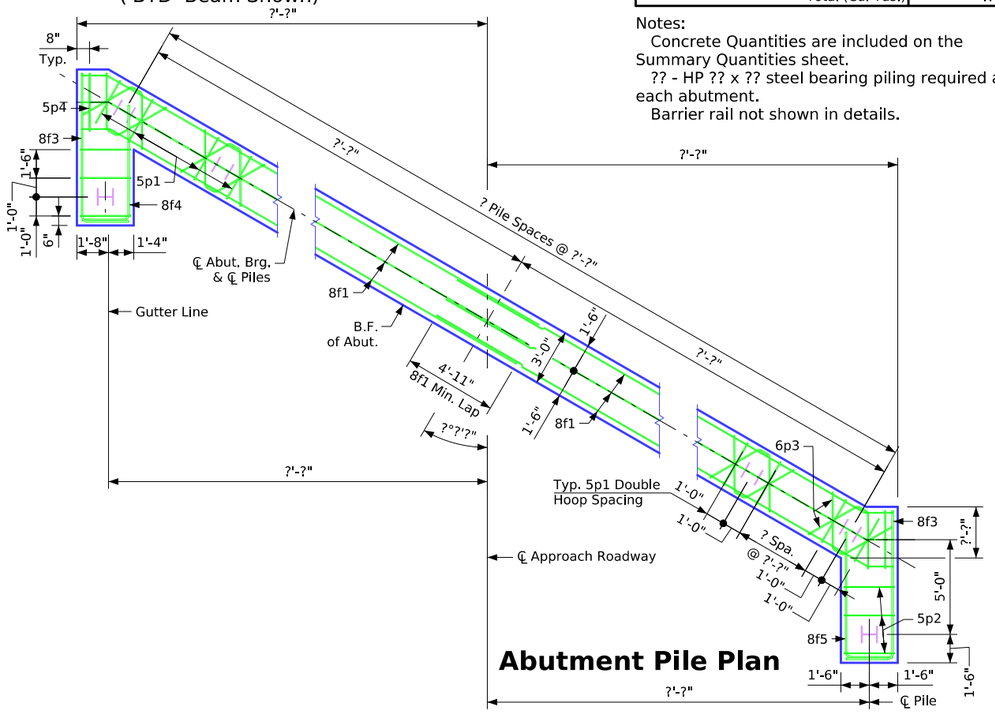

Abutment Pile Plan

Δ Note: See Design Sheet No. ?? for details of barrier rail. Reinforcing bar 5c3 is included in Superstructure Quantities.

Abutment Notes:

Minimum clear distance from face of concrete to near reinforcing bar is to be 2" unless otherwise noted or shown.

If necessary to prevent damage to the end of the bridge deck and backwall from construction equipment, an appropriate method of protection approved by the Engineer shall be provided by the Bridge Contractor at no extra cost to the State.

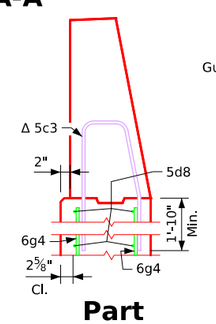

Part Section C-C

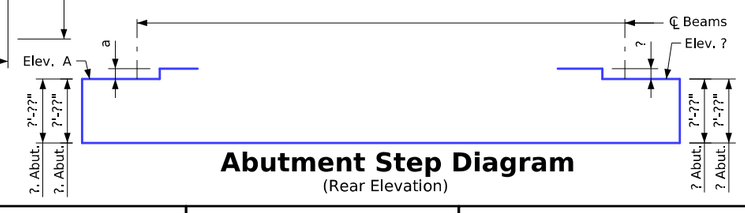

Abutment Step Diagram

(Rear Elevation)

Abutment Footing Details

Correction 04-14: Added Concrete Quantity Table & Referral Note to Summary Quantity Sheet. Removed Design Bearing Note for Abut. Piling from Abutment Notes.
Revised 05-2026: In "Part Section A-A", changed 8g1 bar edge of abutment offset dimension to 3 3/4" (was 3") and changed spacing to 2 Spaces at 8 1/2" (was 2 Spaces at 9"). In "Part Section C-C", flipped/switched orientation of horizontal and vertical bars in outside face of wingwall, and changed wingwall outer face rebar clearance to 2 5/8" (was 3"). Added "Control Point" text.
Revised 06-2026: In "Part Section A-A", corrected location of "3 Eq. Spa. (Typ.)" dimension of rebar spacing at end of beam.
BTIntegralBridges.dgn - 2088-BTCD - Issued 02-08. This Sheet Re-Issued 11-2023. Sheet Format Update.

FILE NO.	ENGLISH	DESIGN TEAM	"BTC" or "BTD" Beams - Integral Abutment Details - (L.A.) 15°01' - 30° Skew	Standard Sheet 2088-BTCD	COUNTY	PROJECT NUMBER	SHEET NUMBER

8:25:23 AM 6/11/2026 bkloss pw:\\NTPwint1.dot.int.lan:PWMain\Documents\Highway\Bridge\Standards\Bridges\BTIntegralBridges.dgn

Correction 04-14: Added Concrete Quantity Table & Referral Note to Summary Quantity Sheet. Removed Design Bearing Note for Abut. Piling from Abutment Notes.
Revised 05-2026: In "Part Section A-A", changed 8g1 bar edge of abutment offset dimension to 3 3/4" (was 3") and changed spacing to 2 Spaces at 8 1/2" (was 2 Spaces at 9"). In "Part Section C-C" and vertical bars in outside face of wingwall, and changed wingwall outer face rebar clearance to 2 5/8" (was 3"). Added "Control Point" text.
Revised 06-2026: In "Part Section A-A", corrected location of "3 Eq. Spa. (Typ.)" dimension of rebar spacing at end of beam.
BTIntegralBridges.dgn - 2088-BTE - Issued 02-08. This Sheet Re-Issued 11-2023. Sheet Format Update.

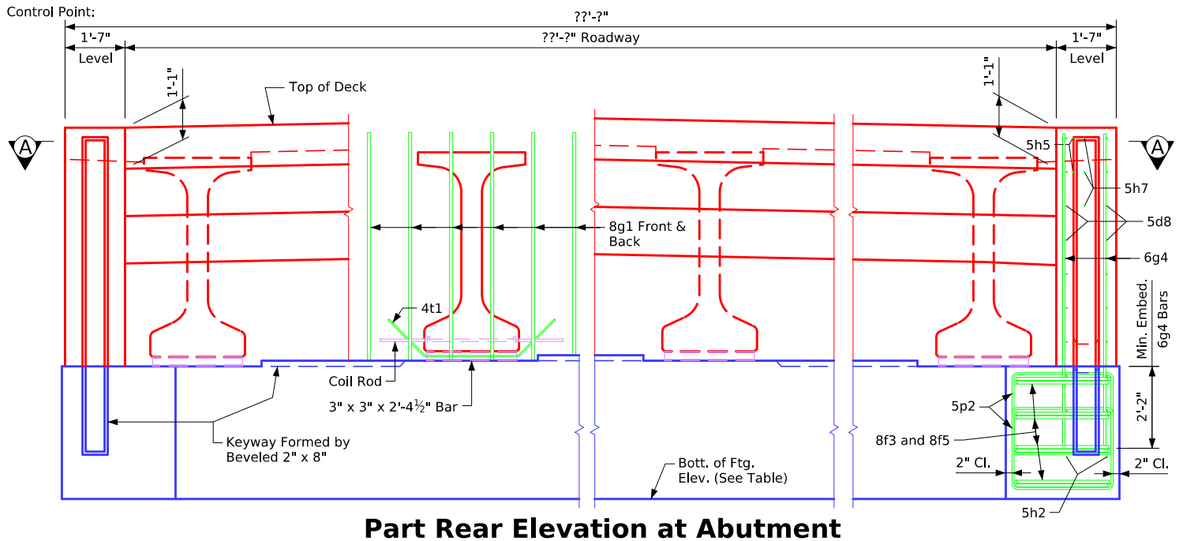

Part Rear Elevation at Abutment

(Wings not Shown)

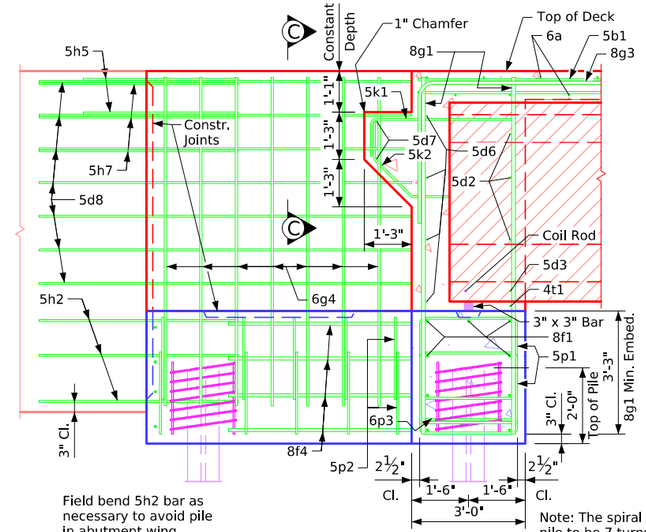

Field bend 5h2 bar as necessary to avoid pile in abutment wing.

Note: The spiral at the top of each pile to be 7 turns of no. 2 bar, 21" diameter, 3" pitch with 3 - L⅞" x ⅞" x ⅛" spacers punched to hold spiral.

Part Section B-B

Table of Abutment Elevations

Point	? Abutment	? Abutment
Elev. A	???.??	???.??
Bottom Footing Elev.	???.??	???.??

Table of Abutment Steps

Step	? Abutment	? Abutment
a	???.??	???.??

Abutment Concrete Quantity

Location	Quantity
? Abutment Footing	?.?
? Abutment Footing	?.?
Total (Cu. Yds.)	?.?

Notes:
Concrete Quantities are included on the Summary Quantities sheet.
?? - HP ?? x ?? steel bearing piling required at each abutment.
Barrier rail not shown in details.

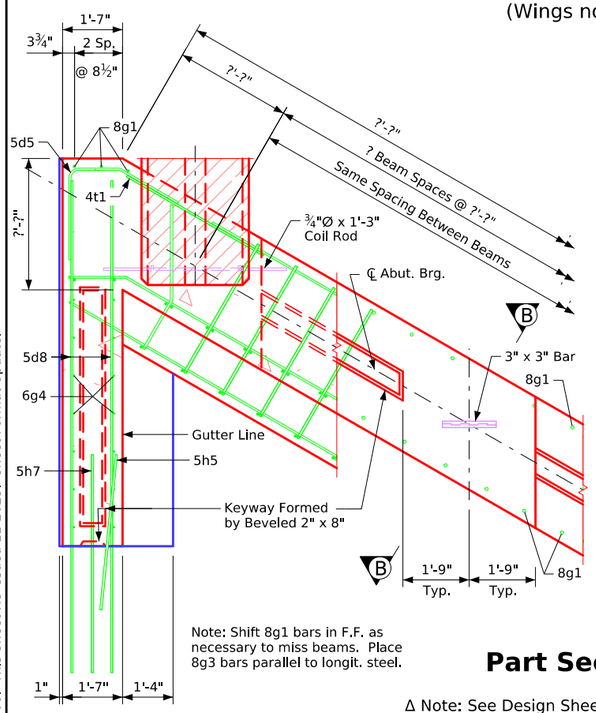

Note: Shift 8g1 bars in F.F. as necessary to miss beams. Place 8g3 bars parallel to longit. steel.

Part Section A-A

Δ Note: See Design Sheet No. ?? for details of barrier rail. Reinforcing bar 5c3 is included in Superstructure Quantities.

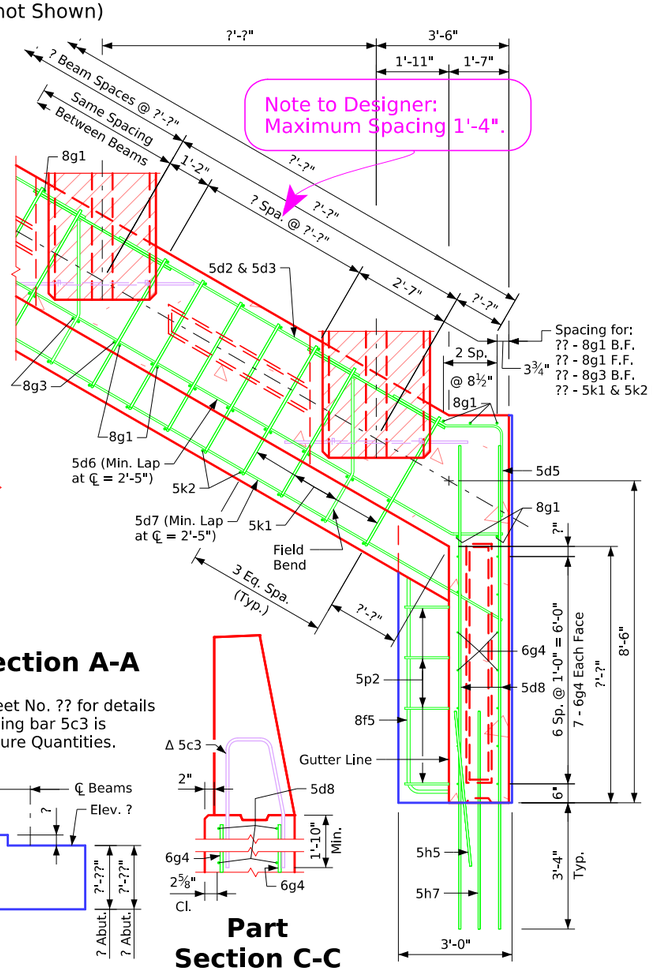

Part Section C-C

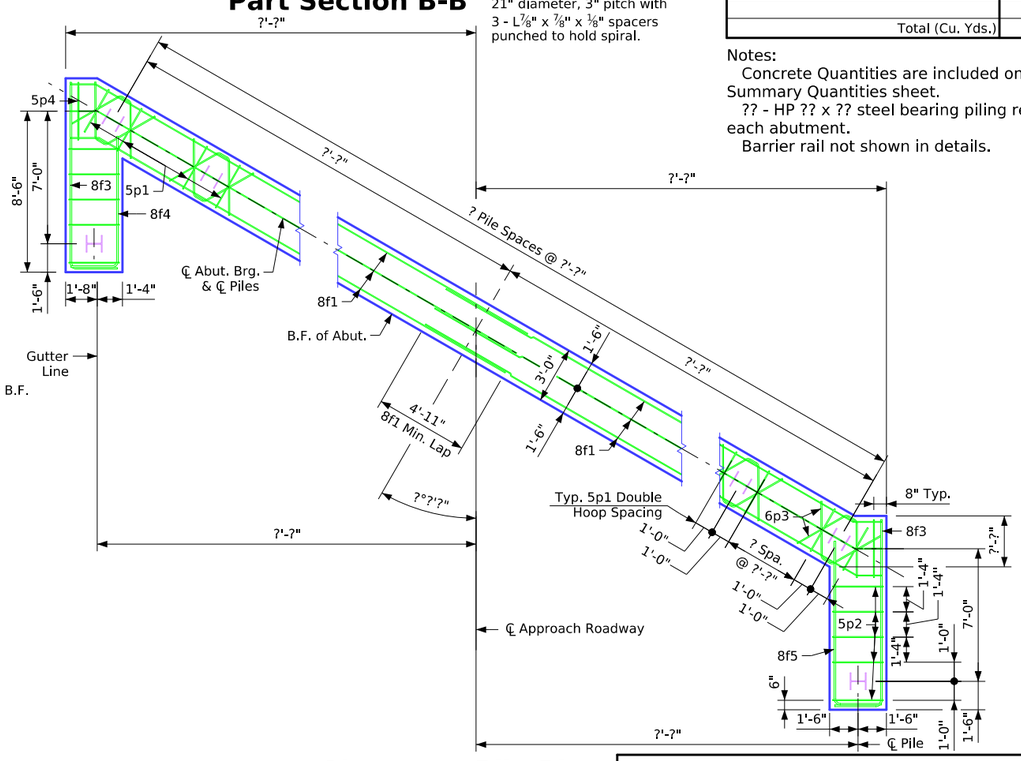

Abutment Pile Plan

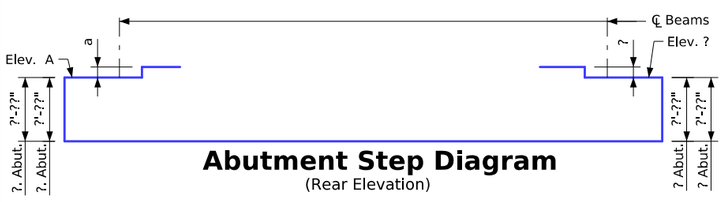

Abutment Step Diagram

(Rear Elevation)

Abutment Notes:

Minimum clear distance from face of concrete to near reinforcing bar is to be 2" unless otherwise noted or shown.

If necessary to prevent damage to the end of the bridge deck and backwall from construction equipment, an appropriate method of protection approved by the Engineer shall be provided by the Bridge Contractor at no extra cost to the State.

Abutment Footing Details

FILE NO.	ENGLISH	DESIGN TEAM	"BTE" Beams - Integral Abutment Details - (L,A,) 15°01' - 30° Skew	Standard Sheet 2088-BTE	COUNTY	PROJECT NUMBER	SHEET NUMBER

Control Point:

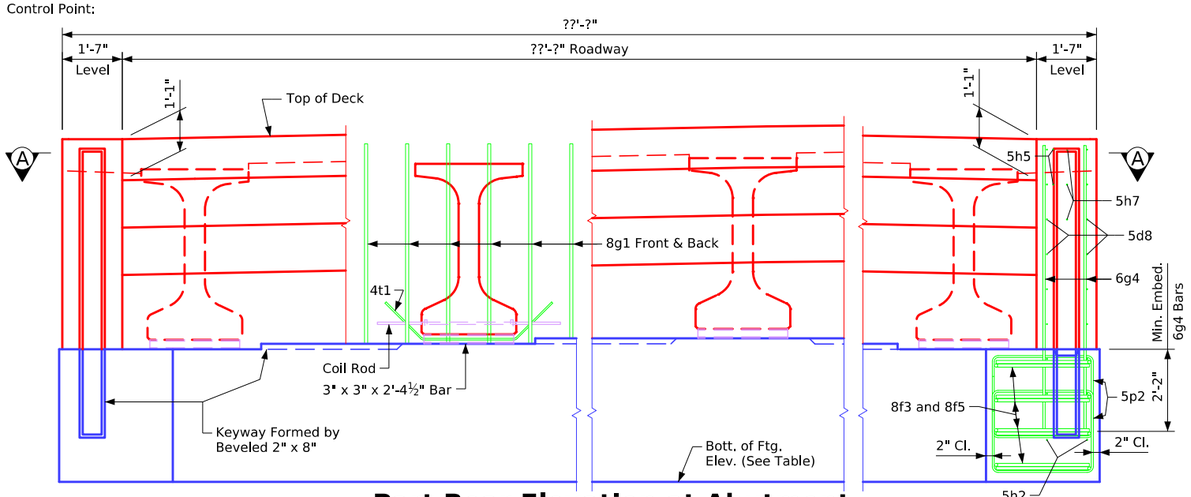

Part Rear Elevation at Abutment

(Wings not Shown)

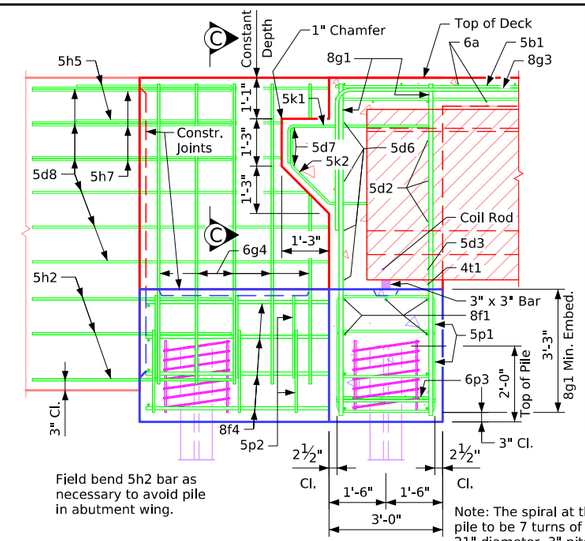

Field bend 5h2 bar as necessary to avoid pile in abutment wing.

Note: The spiral at the top of each pile to be 7 turns of no. 2 bar, 21" diameter, 3" pitch with 3 - L⅞" x ⅞" x ⅛" spacers punched to hold spiral.

Part Section B-B

('BTD' Beam Shown)

Table of Abutment Elevations

Point	? Abutment	? Abutment
Elev. A	???.??	???.??
Bottom Footing Elev.	???.??	???.??

Table of Abutment Steps

Step	? Abutment	? Abutment
a	???.??	???.??

Abutment Concrete Quantity

Location	Quantity
? Abutment Footing	?.?
? Abutment Footing	?.?
Total (Cu. Yds.)	?.?

Notes:
Concrete Quantities are included on the Summary Quantities sheet.
?? - HP ?? x ?? steel bearing piling required at each abutment.
Barrier rail not shown in details.

Note to Designer:
Maximum Spacing 1'-4".

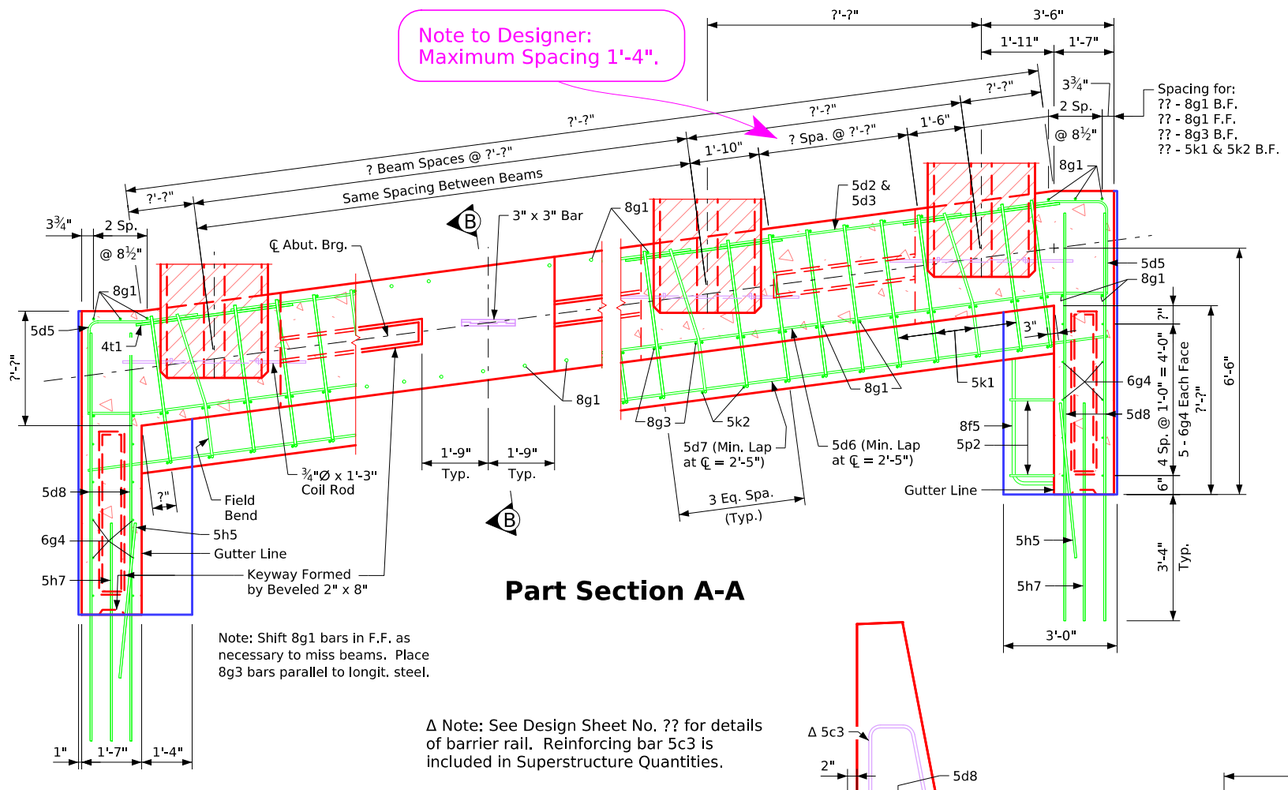

Part Section A-A

Note: Shift 8g1 bars in F.F. as necessary to miss beams. Place 8g3 bars parallel to longit. steel.

Δ Note: See Design Sheet No. ?? for details of barrier rail. Reinforcing bar 5c3 is included in Superstructure Quantities.

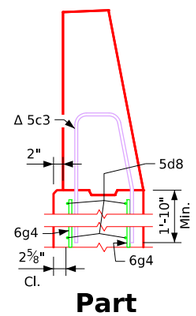

Part Section C-C

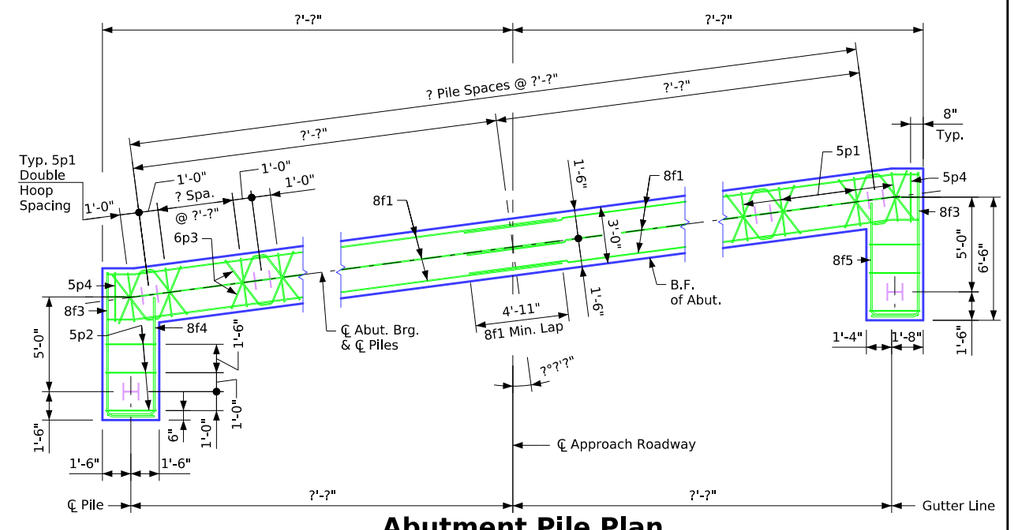

Abutment Pile Plan

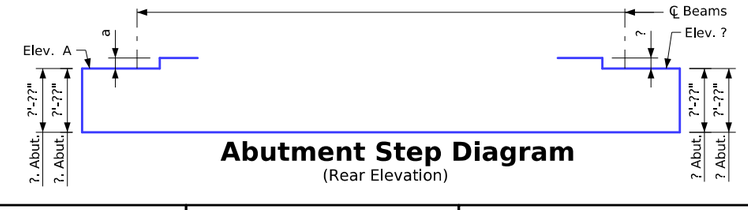

Abutment Step Diagram

(Rear Elevation)

Abutment Notes:

Minimum clear distance from face of concrete to near reinforcing bar is to be 2" unless otherwise noted or shown.

If necessary to prevent damage to the end of the bridge deck and backwall from construction equipment, an appropriate method of protection approved by the Engineer shall be provided by the Bridge Contractor at no extra cost to the State.

Abutment Footing Details

Correction 04-14: Added Concrete Quantity Table & Referral Note to Summary Quantity Sheet. Removed Design Bearing Note for Abut. Piling from Abutment Notes.
Revised 05-2026: In "Part Section A-A", changed 8g1 bar edge of abutment offset dimension to 3 3/4" (was 3") and changed spacing to 2 Spaces at 8 1/2" (was 2 Spaces at 9"). In "Part Section C-C" and vertical bars in outside face of wingwall, and changed wingwall outer face rebar clearance to 2 5/8" (was 3"). Added "Control Point" text.
Revised 06-2026: In "Part Section A-A", corrected location of "3 Eq. Spa. (Typ.)" dimension of rebar spacing at end of beam.
BTIntegralBridges.dgn - 2089-BTCD - Issued 02-08. This Sheet Re-issued 11-2023. Sheet Format Update.

FILE NO.	ENGLISH	DESIGN TEAM	"BTC" or "BTD" Beams - Integral Abutment Details - (R.A.) 0°0' - 7°30' Skew	Standard Sheet 2089-BTCD	COUNTY	PROJECT NUMBER	SHEET NUMBER

8:25:25 AM 6/11/2026 bkloss pw:\\NTPwint1.dot.int.lan:PWMain\Documents\Highway\Bridge\Standards\Bridges\BTIntegralBridges.dgn

Control Point:

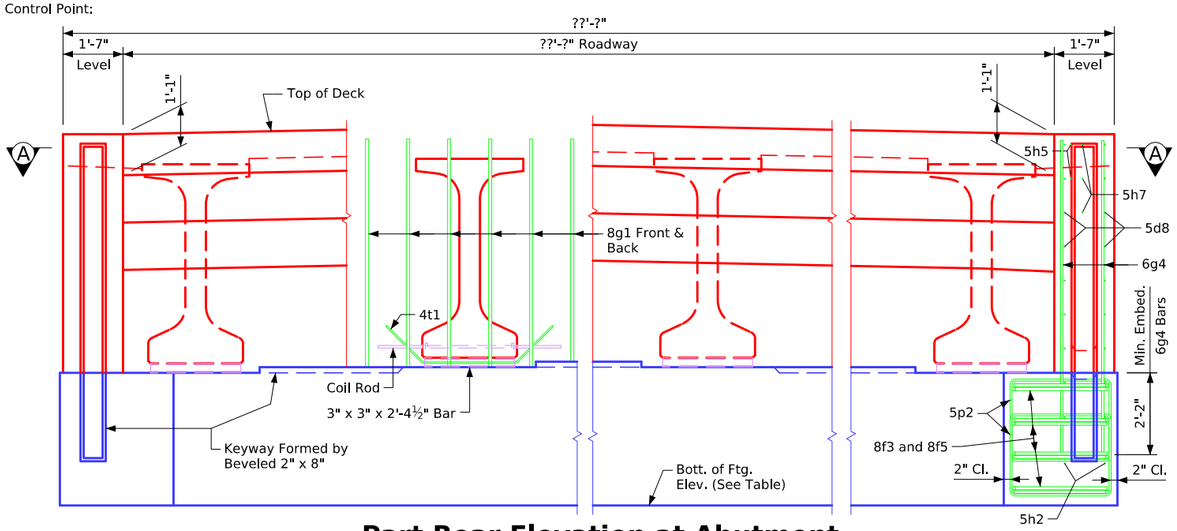

Part Rear Elevation at Abutment

(Wings not Shown)

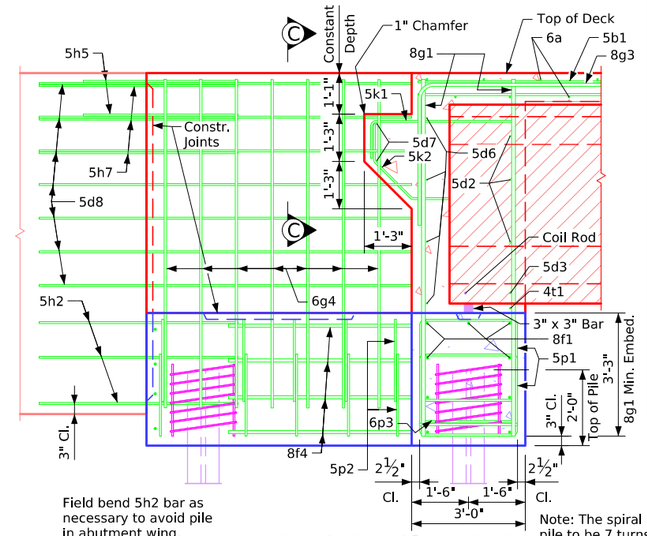

Field bend 5h2 bar as necessary to avoid pile in abutment wing.

Part Section B-B

Note: The spiral at the top of each pile to be 7 turns of no. 2 bar, 21" diameter, 3" pitch with 3 - L⅞" x ⅞" x ⅛" spacers punched to hold spiral.

Table of Abutment Elevations

Point	? Abutment	? Abutment
Elev. A	???.??	???.??
Bottom Footing Elev.	???.??	???.??

Table of Abutment Steps

Step	? Abutment	? Abutment
a	???.??	???.??

Abutment Concrete Quantity

Location	Quantity
? Abutment Footing	?.?
? Abutment Footing	?.?
Total (Cu. Yds.)	?.?

Notes:
Concrete Quantities are included on the Summary Quantities sheet.
?? - HP ?? x ?? steel bearing piling required at each abutment.
Barrier rail not shown in details.

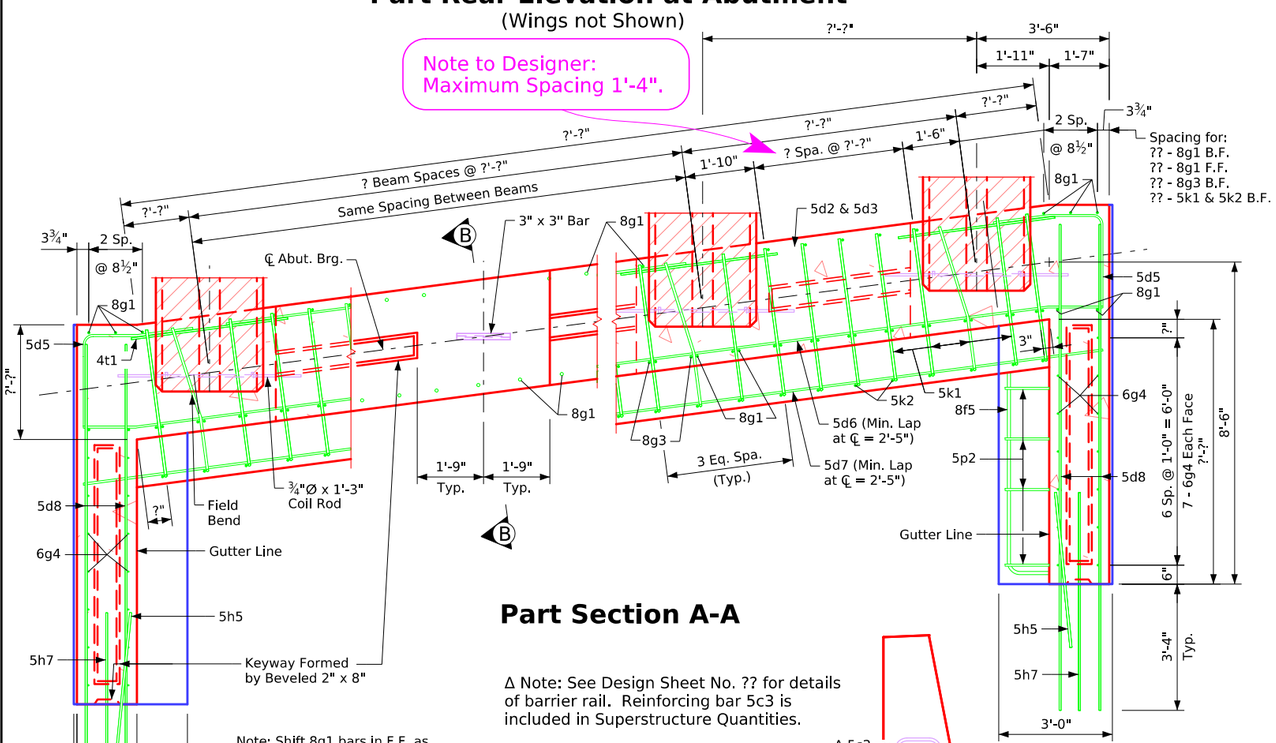

Part Section A-A

Δ Note: See Design Sheet No. ?? for details of barrier rail. Reinforcing bar 5c3 is included in Superstructure Quantities.

Note: Shift 8g1 bars in F.F. as necessary to miss beams. Place 8g3 bars parallel to longit. steel.

Abutment Notes:

Minimum clear distance from face of concrete to near reinforcing bar is to be 2" unless otherwise noted or shown.

If necessary to prevent damage to the end of the bridge deck and backwall from construction equipment, an appropriate method of protection approved by the Engineer shall be provided by the Bridge Contractor at no extra cost to the State.

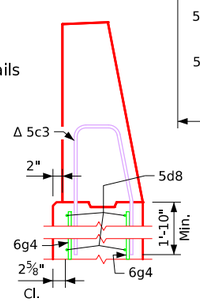

Part Section C-C

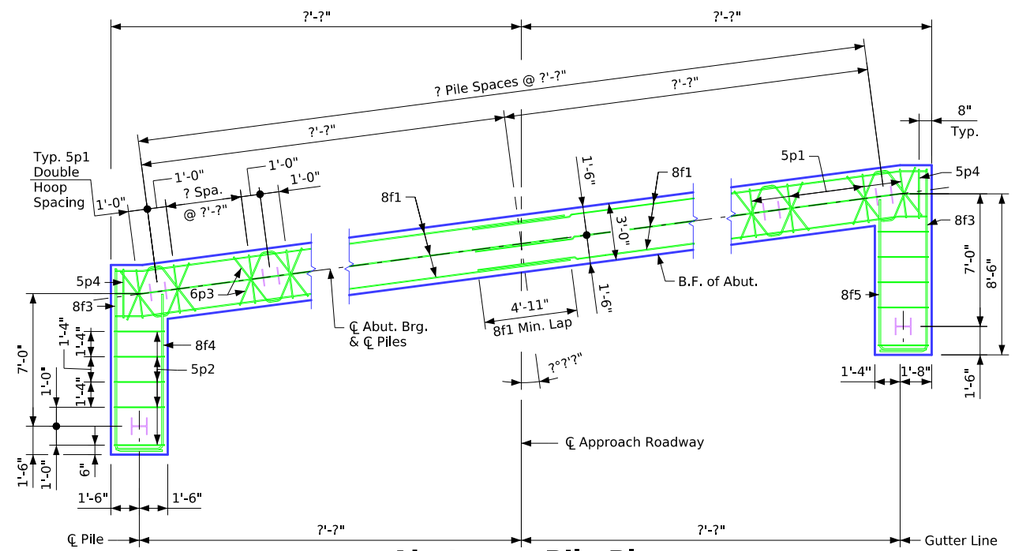

Abutment Pile Plan

Abutment Step Diagram

(Rear Elevation)

Abutment Footing Details

Correction 04-14: Added Concrete Quantity Table & Referral Note to Summary Quantity Sheet. Removed Design Bearing Note for Abut. Piling from Abutment Notes..
Revised 05-2026: In "Part Section A-A", changed 8g1 bar edge of abutment offset dimension to 3 3/4" (was 3") and changed spacing to 2 Spaces at 8 1/2" (was 2 Spaces at 9"). In "Part Section C-C", flipped/switched orientation of horizontal and vertical bars in outside face of wingwall, and changed wingwall outer face rebar clearance to 2 5/8" (was 3"). Added "Control Point" text.
Revised 06-2026: In "Part Section A-A", corrected location of "3 Eq. Spa. (Typ.)" dimension of rebar spacing at end of beam.
BTIntegralBridges.dgn - 2089-BTE - Issued 02-08. This Sheet Re-Issued 11-2023. Sheet Format Update.

FILE NO.	ENGLISH	DESIGN TEAM	"BTE" Beams - Integral Abutment Details - (R,A,) 0°0' - 7°30' Skew	Standard Sheet 2089-BTE	COUNTY	PROJECT NUMBER	SHEET NUMBER

8:25:25 AM 6/11/2026 bkloss pw:\\NTPwint1.dot.int.lan:PWMain\Documents\Highway\Bridge\Standards\Bridges\BTIntegralBridges.dgn

Control Point:

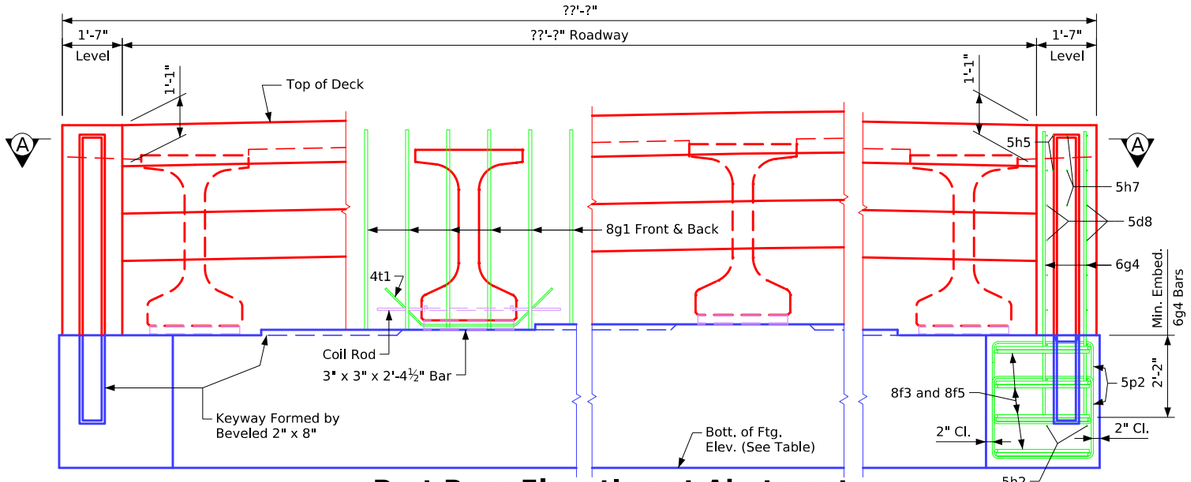

Part Rear Elevation at Abutment

(Wings not Shown)

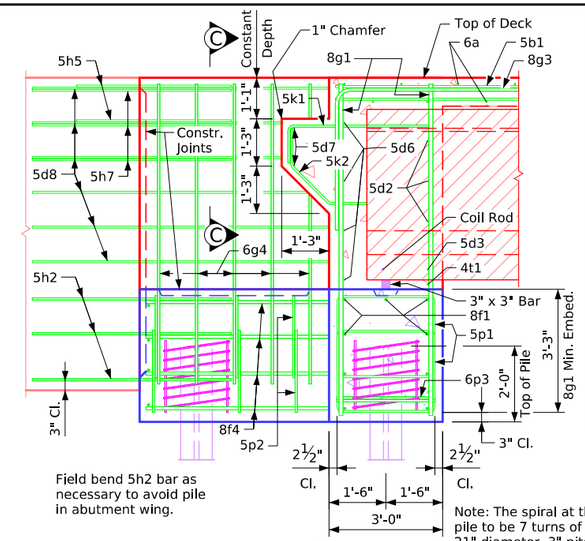

Note: The spiral at the top of each pile to be 7 turns of no. 2 bar, 21" diameter, 3" pitch with 3 - L⅞" x ⅞" x ⅛" spacers punched to hold spiral.

Part Section B-B

('BTD' Beam Shown)

Table of Abutment Elevations

Point	? Abutment	? Abutment
Elev. A	???.??	???.??
Bottom Footing Elev.	???.??	???.??

Table of Abutment Steps

Step	? Abutment	? Abutment
a	???.??	???.??

Abutment Concrete Quantity

Location	Quantity
? Abutment Footing	?.?
? Abutment Footing	?.?
Total (Cu. Yds.)	?.?

Notes:
Concrete Quantities are included on the Summary Quantities sheet.
?? - HP ?? x ?? steel bearing piling required at each abutment.
Barrier rail not shown in details.

Note to Designer:
Maximum Spacing 1'-4".

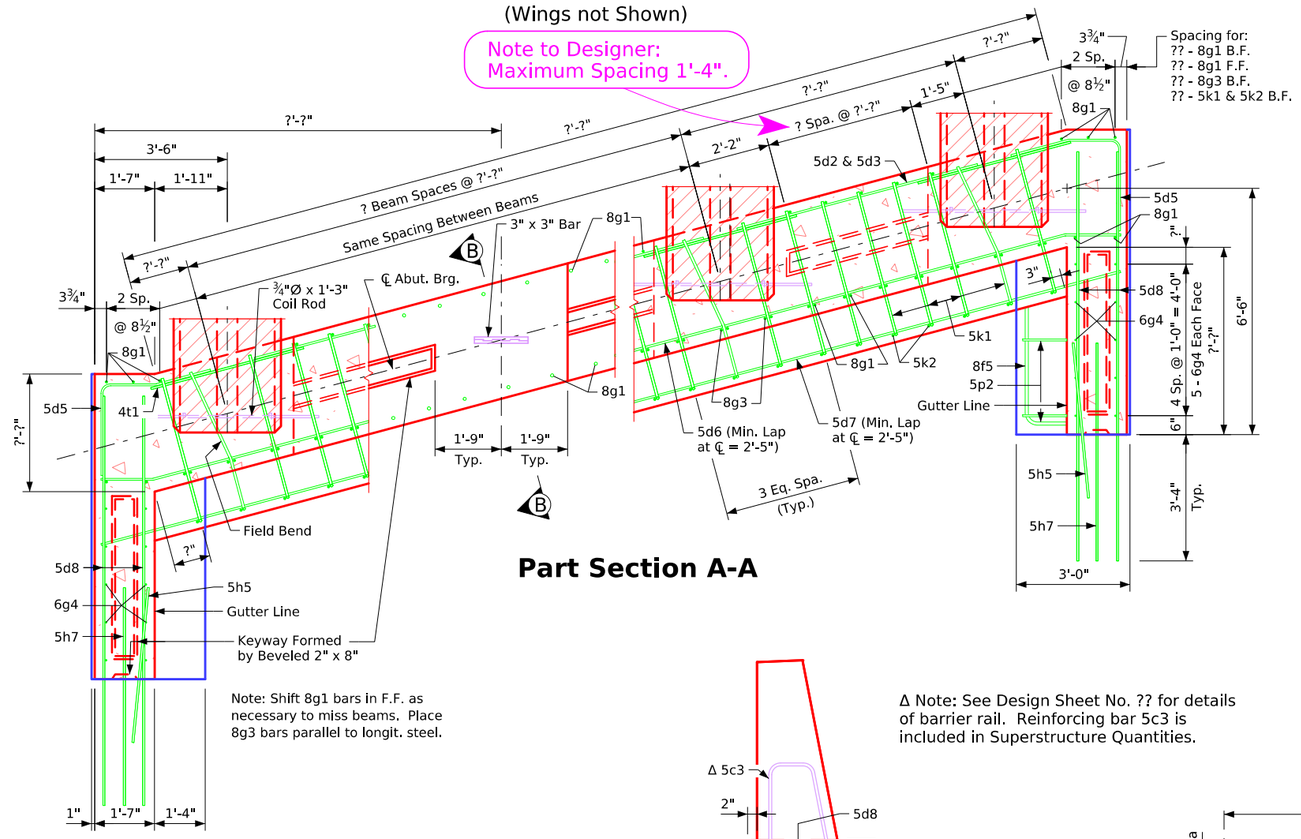

Note: Shift 8g1 bars in F.F. as necessary to miss beams. Place 8g3 bars parallel to longit. steel.

Part Section A-A

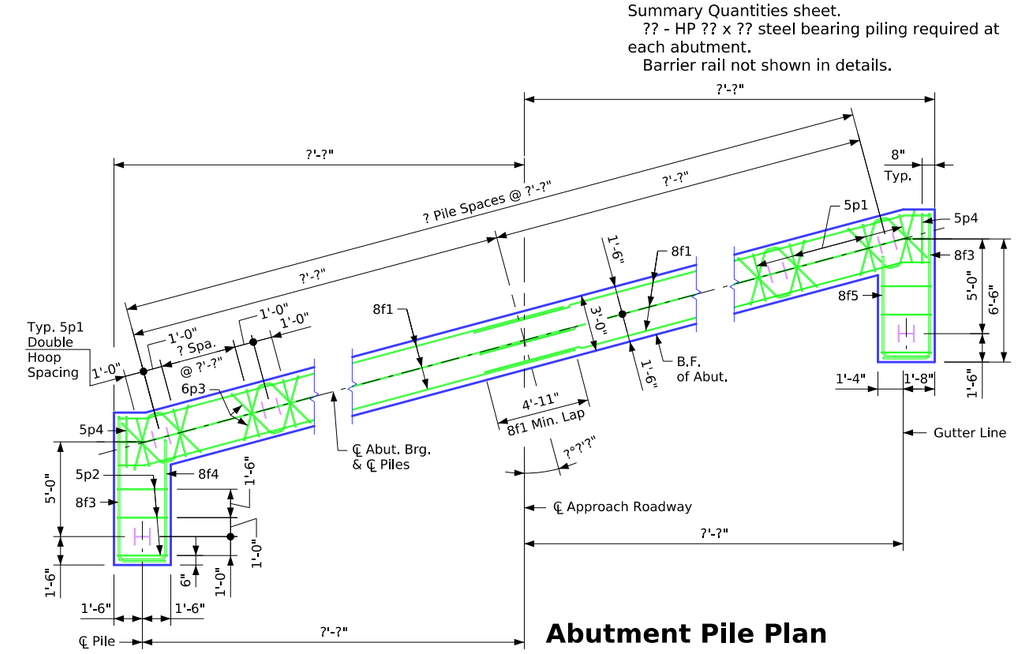

Abutment Pile Plan

Abutment Notes:

Minimum clear distance from face of concrete to near reinforcing bar is to be 2" unless otherwise noted or shown.

If necessary to prevent damage to the end of the bridge deck and backwall from construction equipment, an appropriate method of protection approved by the Engineer shall be provided by the Bridge Contractor at no extra cost to the State.

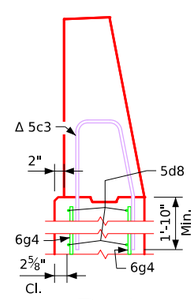

Part Section C-C

Δ Note: See Design Sheet No. ?? for details of barrier rail. Reinforcing bar 5c3 is included in Superstructure Quantities.

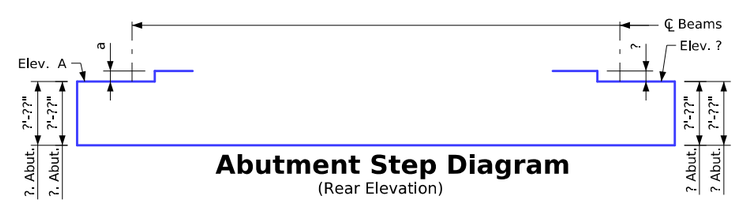

Abutment Step Diagram

(Rear Elevation)

Abutment Footing Details

Correction 04-14: Added Concrete Quantity Table & Referral Note to Summary Quantity Sheet. Removed Design Bearing Note for Abut. Piling from Abutment Notes.
Revised 05-2026: In "Part Section A-A", changed 8g1 bar edge of abutment offset dimension to 3 3/4" (was 3") and changed spacing to 2 Spaces at 8 1/2" (was 2 Spaces at 9"). In "Part Section C-C", flipped/switched orientation of horizontal and vertical bars in outside face of wingwall, and changed wingwall outer face rebar clearance to 2 5/8" (was 3"). Added "Control Point" text.
Revised 06-2026: In "Part Section A-A", corrected location of "3 Eq. Spa. (Typ.)" dimension of rebar spacing at end of beam.
BTIntegralBridges.dgn - 2090-BTCD - Issued 02-08. This Sheet Re-Issued 11-2023. Sheet Format Update.

FILE NO.	ENGLISH	DESIGN TEAM	"BTC" or "BTD" Beams - Integral Abutment Details - (R.A.) 7°31' - 15° Skew	Standard Sheet 2090-BTCD	COUNTY	PROJECT NUMBER	SHEET NUMBER

8:25:26 AM 6/11/2026 bkloss pw:\\NTPwint1.dot.int.lan:PWMain\Documents\Highway\Bridge\Standards\Bridges\BTIntegralBridges.dgn

Control Point:

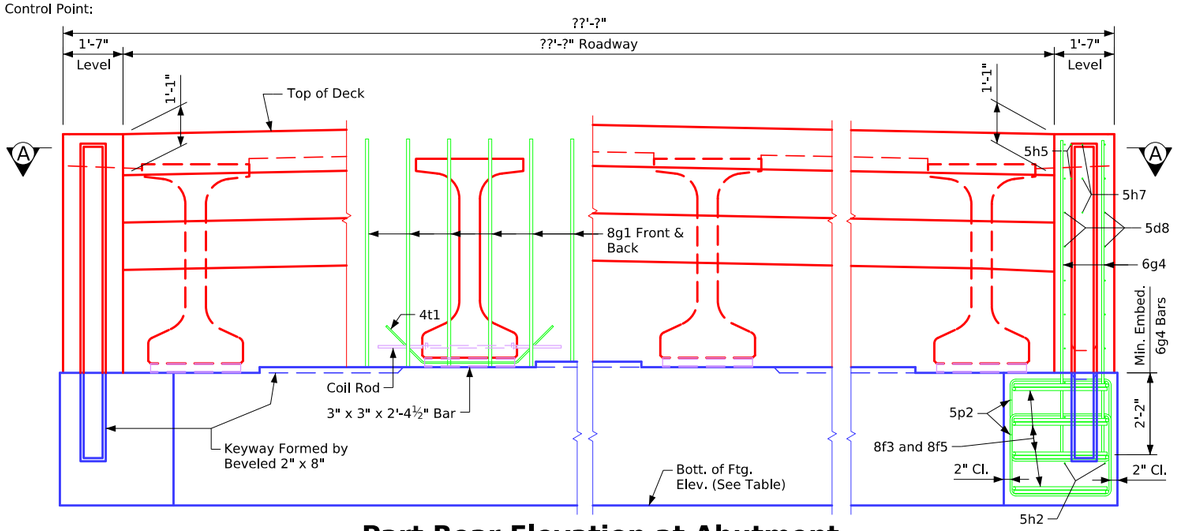

Part Rear Elevation at Abutment

(Wings not Shown)

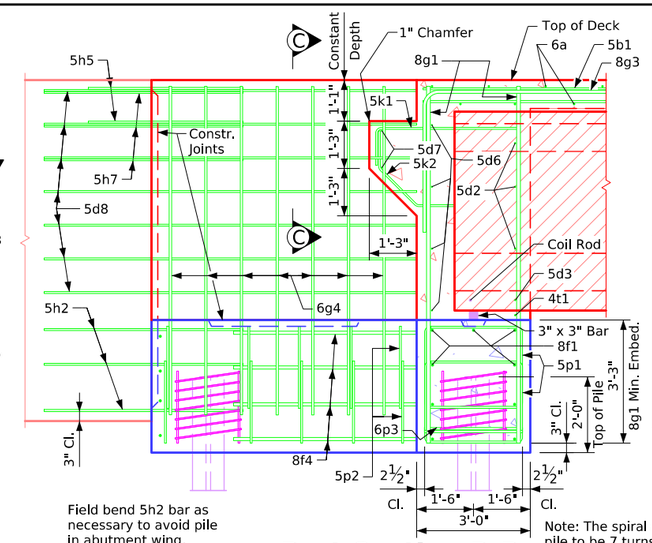

Field bend 5h2 bar as necessary to avoid pile in abutment wing.

Part Section B-B

Note: The spiral at the top of each pile to be 7 turns of no. 2 bar, 21" diameter, 3" pitch with 3 - L⅞" x ⅞" x ⅛" spacers punched to hold spiral.

Table of Abutment Elevations

Point	? Abutment	? Abutment
Elev. A	???.??	???.??
Bottom Footing Elev.	???.??	???.??

Table of Abutment Steps

Step	? Abutment	? Abutment
a	???.??	???.??

Abutment Concrete Quantity

Location	Quantity
? Abutment Footing	?.?
? Abutment Footing	?.?
Total (Cu. Yds.)	?.?

Note to Designer:
Maximum Spacing 1'-4".

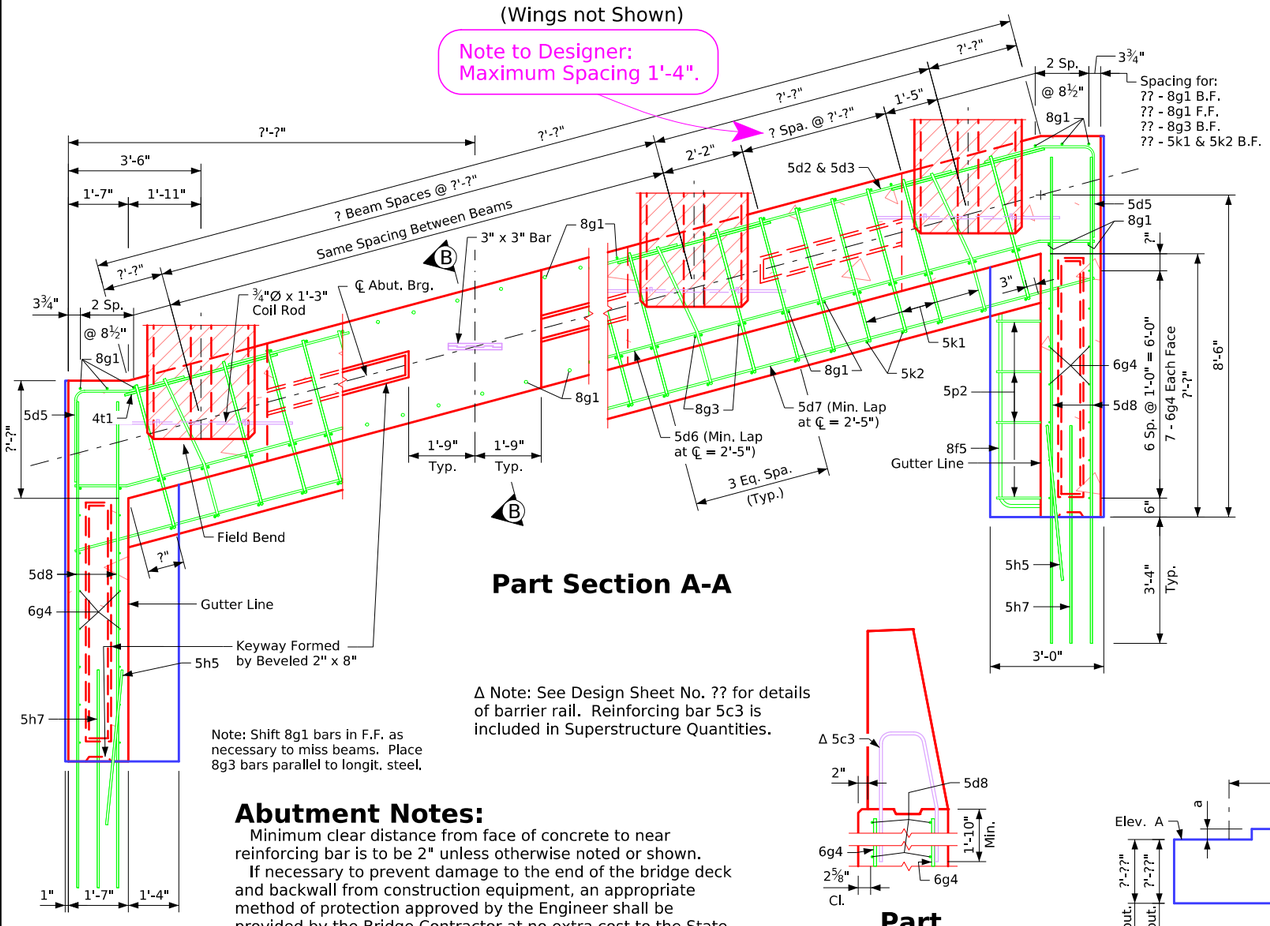

Part Section A-A

Note: Shift 8g1 bars in F.F. as necessary to miss beams. Place 8g3 bars parallel to longit. steel.

Δ Note: See Design Sheet No. ?? for details of barrier rail. Reinforcing bar 5c3 is included in Superstructure Quantities.

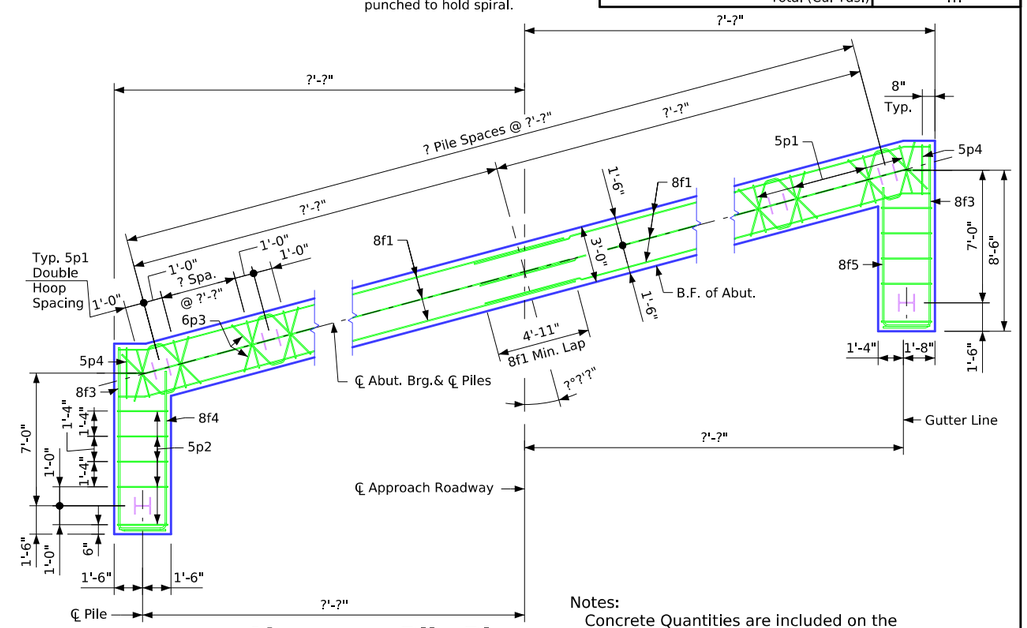

Abutment Pile Plan

Notes:
Concrete Quantities are included on the Summary Quantities sheet.
?? - HP ?? x ?? steel bearing piling required at each abutment.
Barrier rail not shown in details.

Abutment Notes:

Minimum clear distance from face of concrete to near reinforcing bar is to be 2" unless otherwise noted or shown.

If necessary to prevent damage to the end of the bridge deck and backwall from construction equipment, an appropriate method of protection approved by the Engineer shall be provided by the Bridge Contractor at no extra cost to the State.

Part Section C-C

Abutment Step Diagram

(Rear Elevation)

Abutment Footing Details

Correction 04-14: Added Concrete Quantity Table & Referral Note to Summary Quantity Sheet. Removed Design Bearing Note for Abut. Piling from Abutment Notes.
Revised 05-2026: In "Part Section A-A", changed 8g1 bar edge of abutment offset dimension to 3 3/4" (was 3") and changed spacing to 2 Spaces at 8 1/2" (was 2 Spaces at 9"). In "Part Section C-C", changed wingwall outer face rebar clearance to 2 5/8" (was 3"). Added "Control Point" text.
Revised 06-2026: In "Part Section A-A", corrected location of "3 Eq. Spa. (Typ.)" dimension of rebar spacing at end of beam.
BTIntegralBridges.dgn - 2090-BTE - Issued 02-08. This Sheet Re-Issued 11-2023. Sheet Format Update.

Control Point:

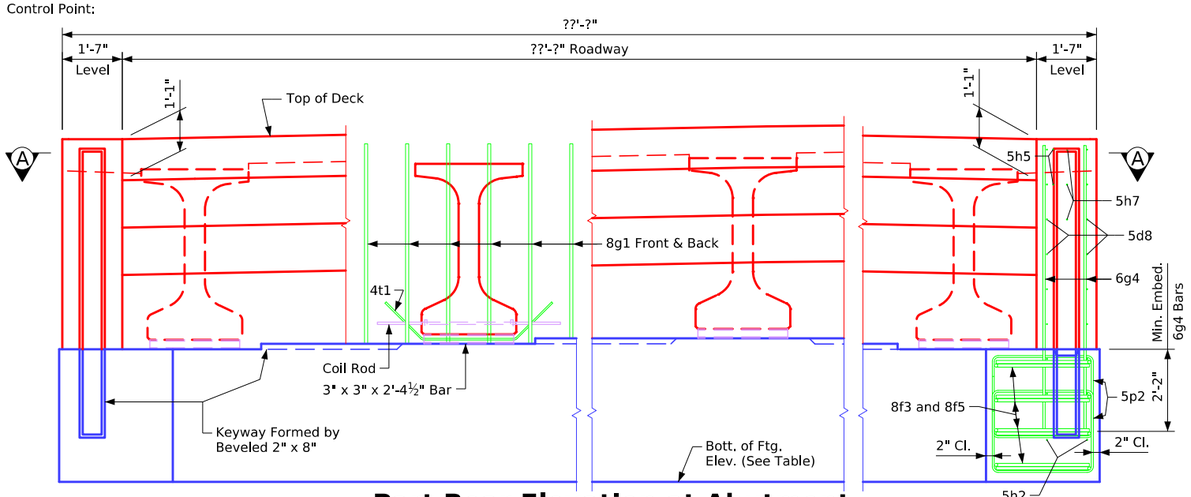

Part Rear Elevation at Abutment

(Wings not Shown)

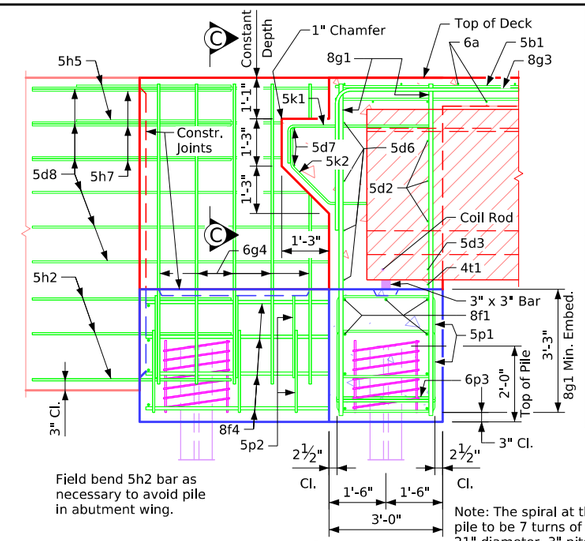

Field bend 5h2 bar as necessary to avoid pile in abutment wing.

Note: The spiral at the top of each pile to be 7 turns of no. 2 bar, 21" diameter, 3" pitch with 3 - L⅞" x ⅞" x ⅛" spacers punched to hold spiral.

Part Section B-B

('BTD' Beam Shown)

Table of Abutment Elevations

Point	? Abutment	? Abutment
Elev. A	???.??	???.??
Bottom Footing Elev.	???.??	???.??

Table of Abutment Steps

Step	? Abutment	? Abutment
a	???.??	???.??

Abutment Concrete Quantity

Location	Quantity
? Abutment Footing	?.?
? Abutment Footing	?.?
Total (Cu. Yds.)	?.?

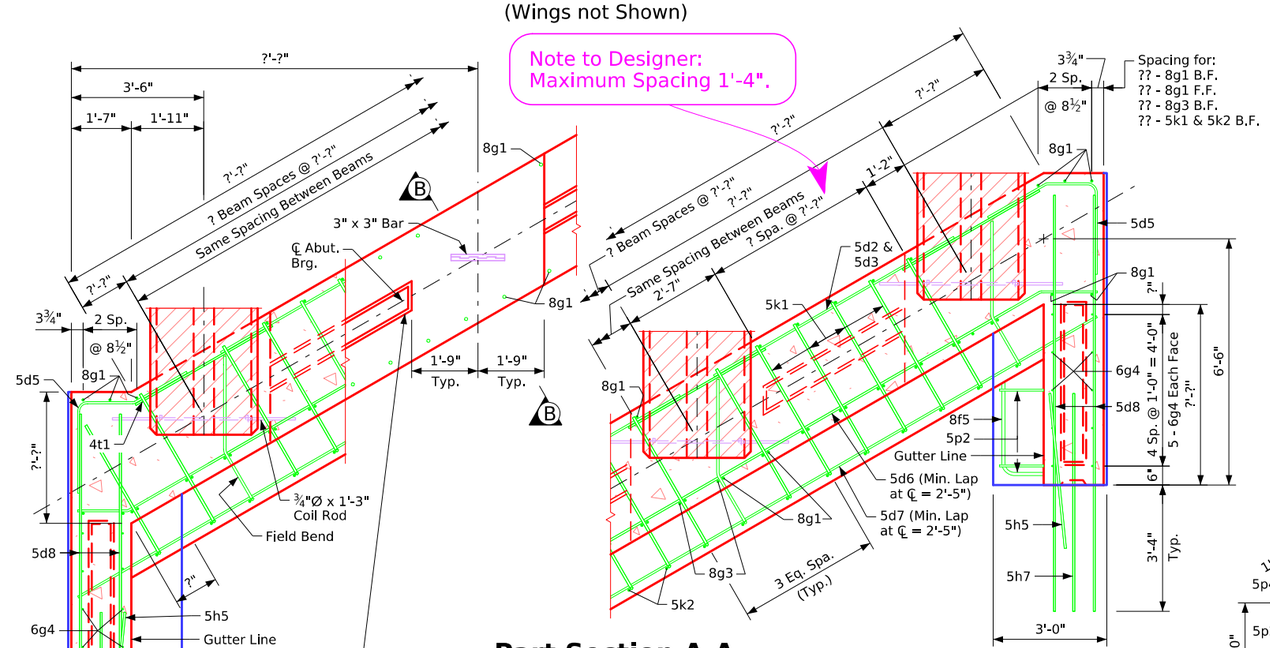

Note: Shift 8g1 bars in F.F. as necessary to miss beams. Place 8g3 bars parallel to longit. steel.

Part Section A-A

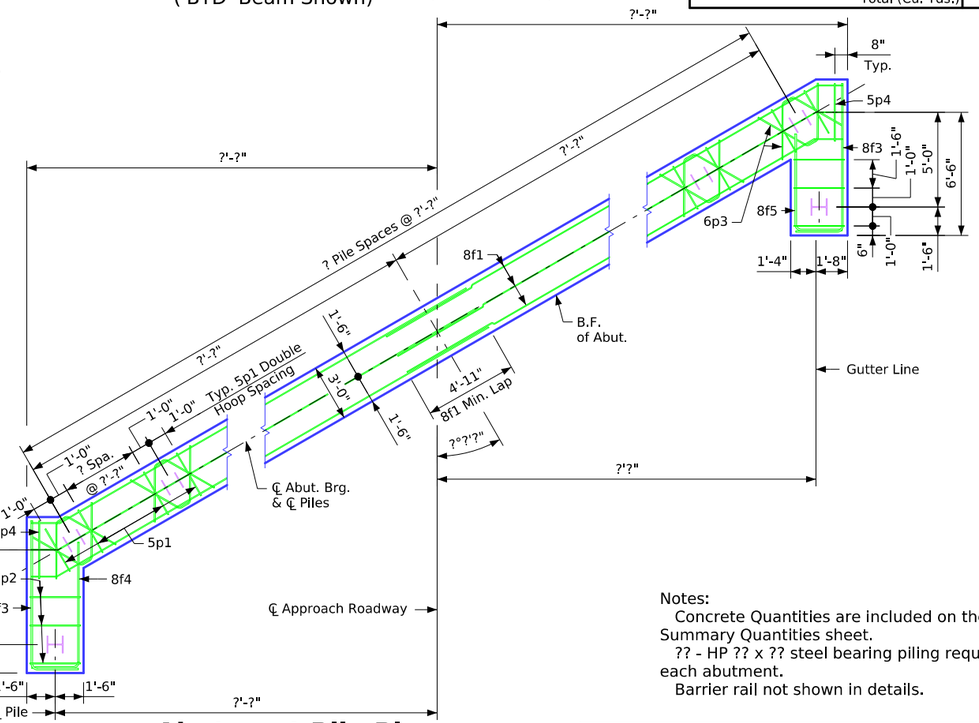

Notes:
Concrete Quantities are included on the Summary Quantities sheet.
?? - HP ?? x ?? steel bearing piling required at each abutment.
Barrier rail not shown in details.

Abutment Pile Plan

Δ Note: See Design Sheet No. ?? for details of barrier rail. Reinforcing bar 5c3 is included in Superstructure Quantities.

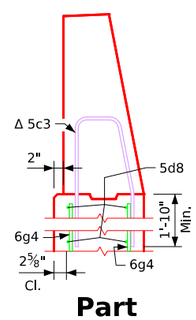

Part Section C-C

Abutment Step Diagram

(Rear Elevation)

Abutment Notes:

Minimum clear distance from face of concrete to near reinforcing bar is to be 2" unless otherwise noted or shown.

If necessary to prevent damage to the end of the bridge deck and backwall from construction equipment, an appropriate method of protection approved by the Engineer shall be provided by the Bridge Contractor at no extra cost to the State.

Abutment Footing Details

Correction 04-14: Added Concrete Quantity Table & Referral Note to Summary Quantity Sheet. Removed Design Bearing Note for Abut. Piling from Abutment Notes.
Revised 05-2026: In "Part Section A-A", changed 8g1 bar edge of abutment offset dimension to 3 3/4" (was 3") and changed spacing to 2 Spaces at 8 1/2" (was 2 Spaces at 9"). In "Part Section C-C", flipped/switched orientation of horizontal and vertical bars in outside face of wingwall, and changed wingwall outer face rebar clearance to 2 5/8" (was 3"). Added "Control Point" text.
Revised 06-2026: In "Part Section A-A", corrected location of "3 Eq. Spa. (Typ.)" dimension of rebar spacing at end of beam.
BTIntegralBridges.dgn - 2091-BTCD - Issued 02-08. This Sheet Re-Issued 11-2023. Sheet Format Update.

FILE NO.	ENGLISH	DESIGN TEAM	"BTC" or "BTD" Beams - Integral Abutment Details - (L,A,) 15°01' - 30° Skew	Standard Sheet 2091-BTCD	COUNTY	PROJECT NUMBER	SHEET NUMBER

8:25:27 AM 6/11/2026 bkloss pw:\\NTPwint1.dot.int.lan:PWMain\Documents\Highway\Bridge\Standards\Bridges\BTIntegralBridges.dgn

Control Point:

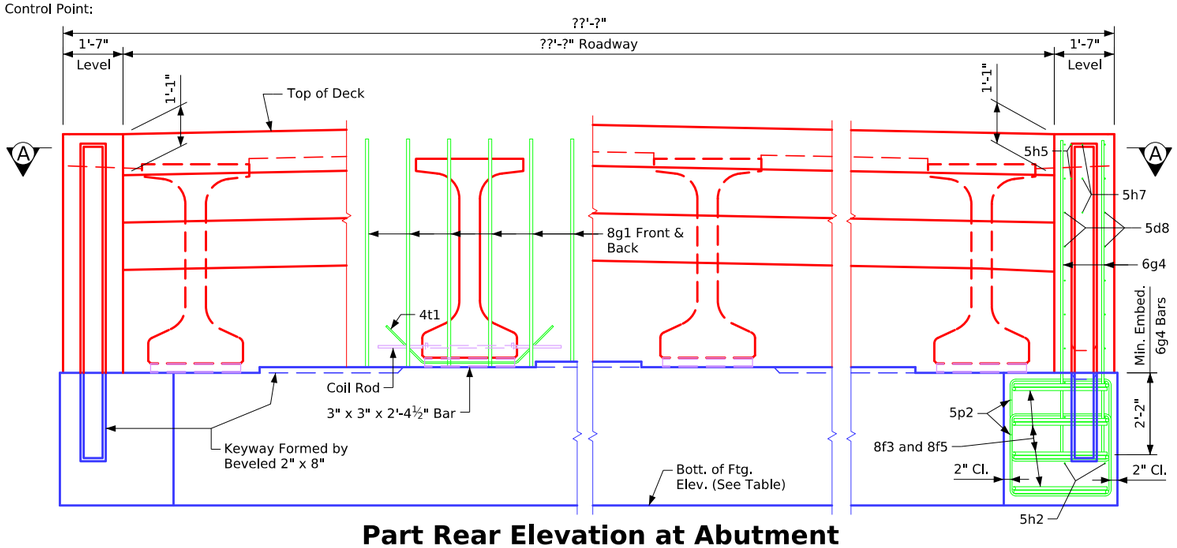

Part Rear Elevation at Abutment

(Wings not Shown)

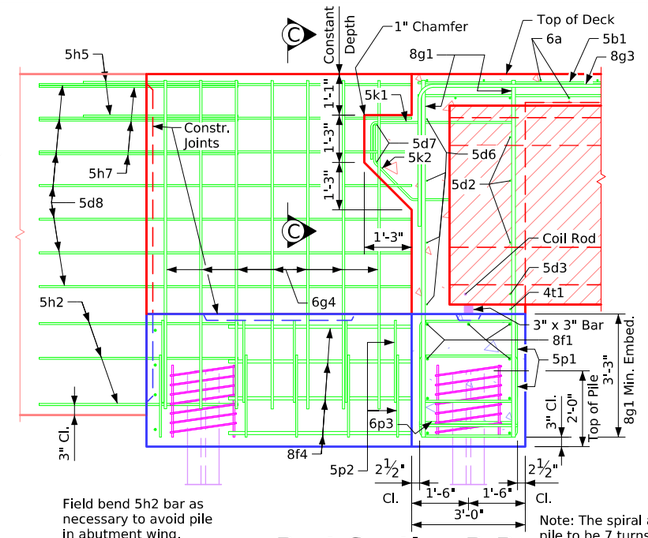

Field bend 5h2 bar as necessary to avoid pile in abutment wing.

Part Section B-B

Note: The spiral at the top of each pile to be 7 turns of no. 2 bar, 21" diameter, 3" pitch with 3 - L⅞" x ⅞" x ⅛" spacers punched to hold spiral.

Table of Abutment Elevations

Point	? Abutment	? Abutment
Elev. A	???.??	???.??
Bottom Footing Elev.	???.??	???.??

Table of Abutment Steps

Step	? Abutment	? Abutment
a	???.??	???.??

Abutment Concrete Quantity

Location	Quantity
? Abutment Footing	?.?
? Abutment Footing	?.?
Total (Cu. Yds.)	?.?

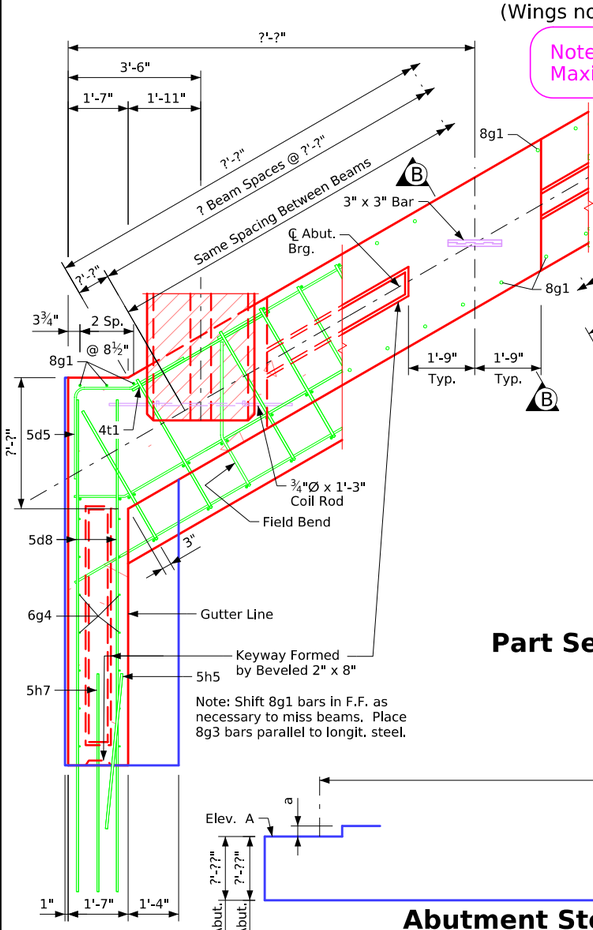

Note: Shift 8g1 bars in F.F. as necessary to miss beams. Place 8g3 bars parallel to longit. steel.

Part Section A-A

Note to Designer:
Maximum Spacing 1'-4".

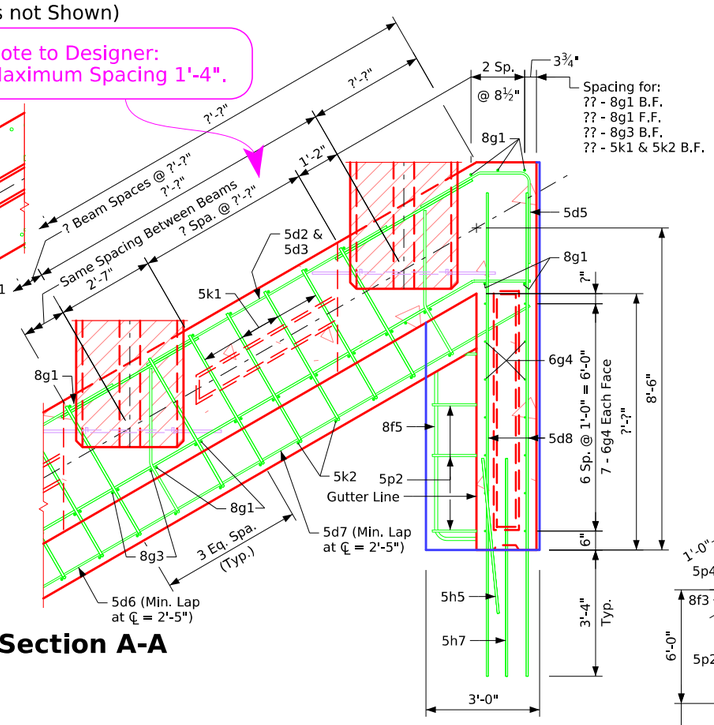

Part Section A-A

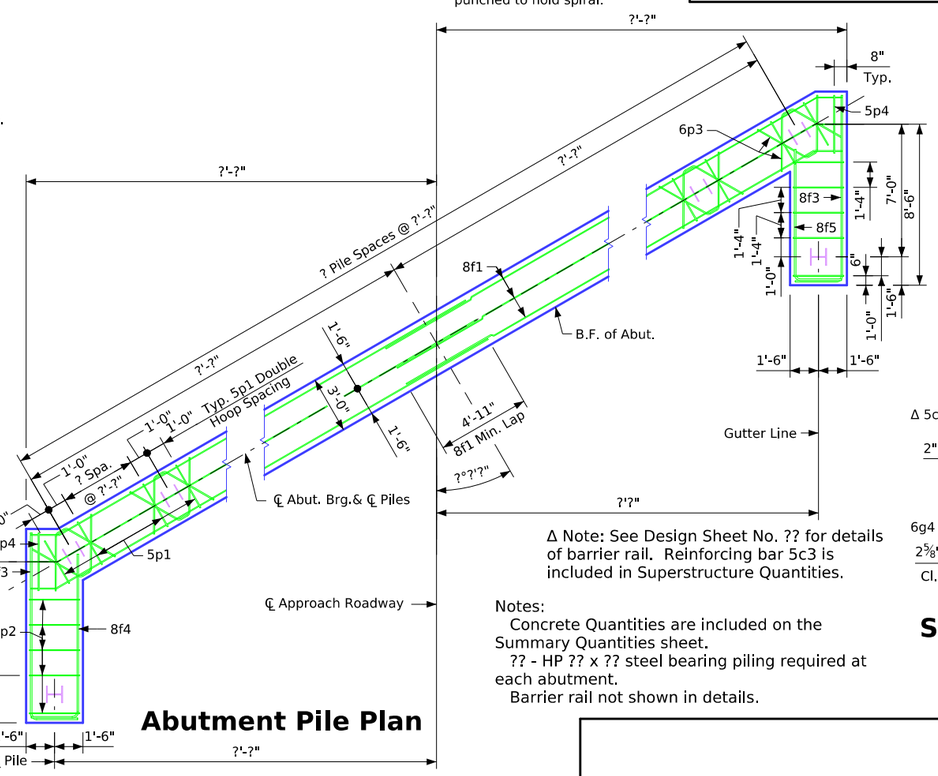

Abutment Pile Plan

Δ Note: See Design Sheet No. ?? for details of barrier rail. Reinforcing bar 5c3 is included in Superstructure Quantities.

Notes:
Concrete Quantities are included on the Summary Quantities sheet.
?? - HP ?? x ?? steel bearing piling required at each abutment.
Barrier rail not shown in details.

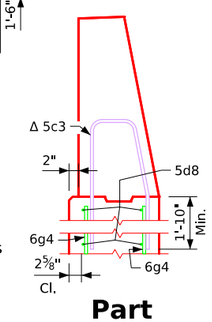

Part Section C-C

Abutment Step Diagram

(Rear Elevation)

Abutment Notes:

Minimum clear distance from face of concrete to near reinforcing bar is to be 2" unless otherwise noted or shown.

If necessary to prevent damage to the end of the bridge deck and backwall from construction equipment, an appropriate method of protection approved by the Engineer shall be provided by the Bridge Contractor at no extra cost to the State.

Abutment Footing Details

Correction 04-14: Added Concrete Quantity Table & Referral Note to Summary Quantity Sheet. Removed Design Bearing Note for Abut. Piling from Abutment Notes.
Revised 05-2026: In "Part Section A-A", changed 8g1 bar edge of abutment offset dimension to 3 3/4" (was 3") and changed spacing to 2 Spaces at 8 1/2" (was 2 Spaces at 9"). In "Part Section C-C", flipped/switched orientation of horizontal and vertical bars in outside face of wingwall, and changed wingwall outer face rebar clearance to 2 5/8" (was 3"). Added "Control Point" text.
Revised 06-2026: In "Part Section A-A", corrected location of "3 Eq. Spa. (Typ.)" dimension of rebar spacing at end of beam.
BTIntegralBridges.dgn - 2091-BTE - Issued 02-08. This Sheet Re-Issued 11-2023. Sheet Format Update.

FILE NO.	ENGLISH	DESIGN TEAM	"BTE" BEAMS - INTEGRAL ABUTMENT DETAILS - (R,A,) 15°01 - 30° SKEW	Standard Sheet 2091-BTE	COUNTY	PROJECT NUMBER	SHEET NUMBER

8:25:28 AM 6/11/2026 bkloss pw:\\NTPwint1.dot.int.lan:PWMain\Documents\Highway\Bridge\Standards\Bridges\BTIntegralBridges.dgn

Table of Size "b2" Bar

Longest Adjacent Span	BTB Beam Bar Size
30'-0"	**4
35'-0"	**4
40-'0"	**4
45-0"	**5
50'-0"	**6
55'-0"	**6
60'-0"	**6
65'-0"	**7
70'-0"	**8
75'-0"	**8
80'-0"	**9
85'-0"	7
90'-0"	8
95'-0"	8
100'-0"	8
105'-0"	9

The midpoint of the 'b2' bar is to be placed at the ℄ of pier.
** Indicates 'b2' bar placed in top deck only.

Note to Designer:
6j1 spacing shown for TL-4 barrier.
See Bridge Design Manual
Section 5.2 for TL-5 6j1 spacing.

Deck area = 24.03 Sq. Ft.
Deck area does not include the nominal ½" haunch.

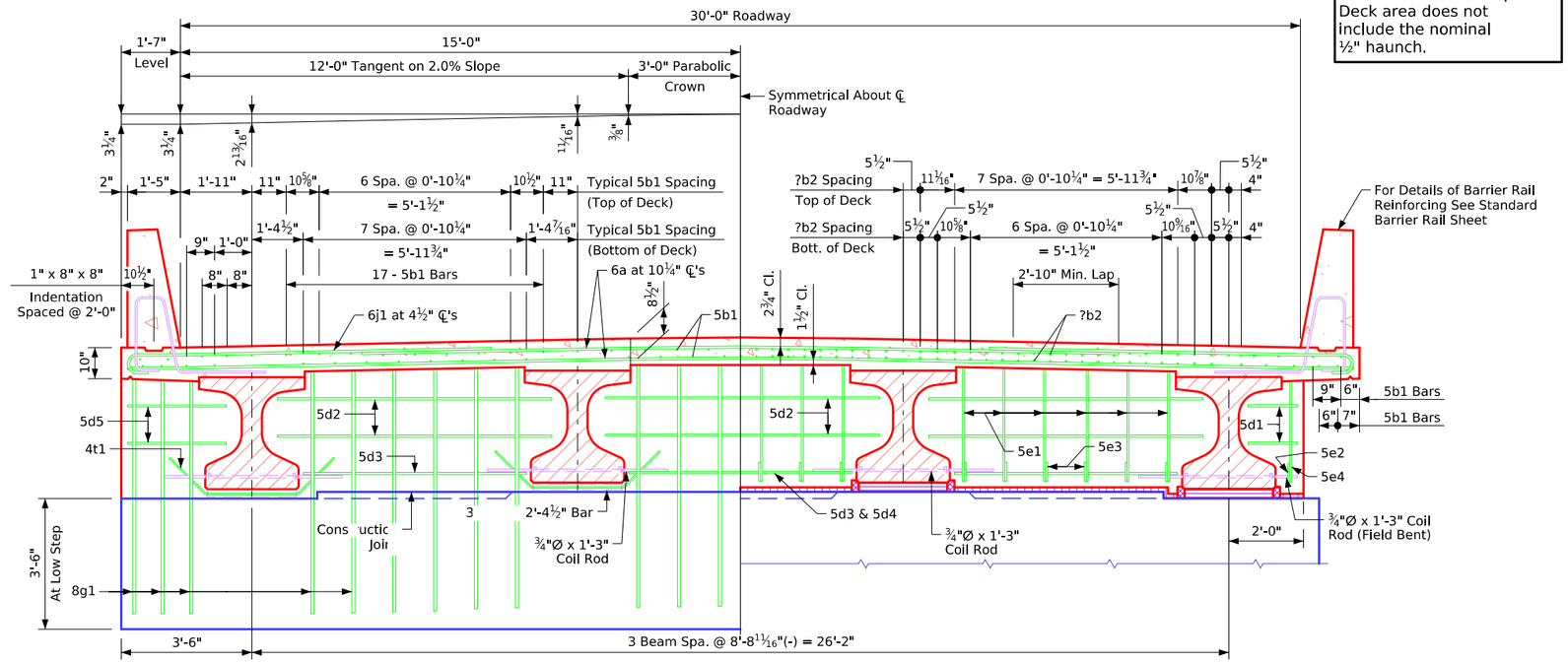

Half Section Near Abutment

Half Section Near Pier

Note: For details of Intermediate Diaphragm see Design Sheet No. ??.

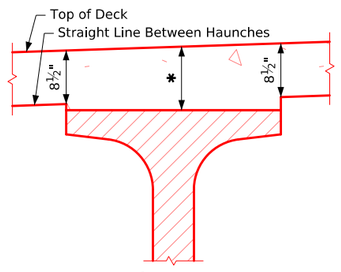

Interior Beams

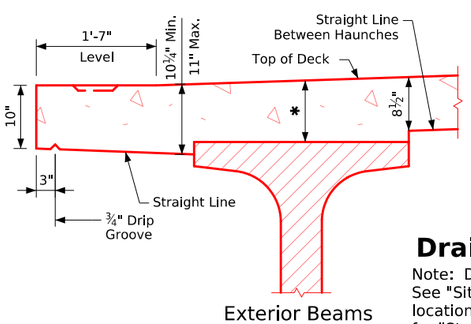

Exterior Beams

Typical Deck and Haunch Detail

* For Deck Thickness Over Beams See "Haunch And Camber Details" on Design Sheet No. ?.

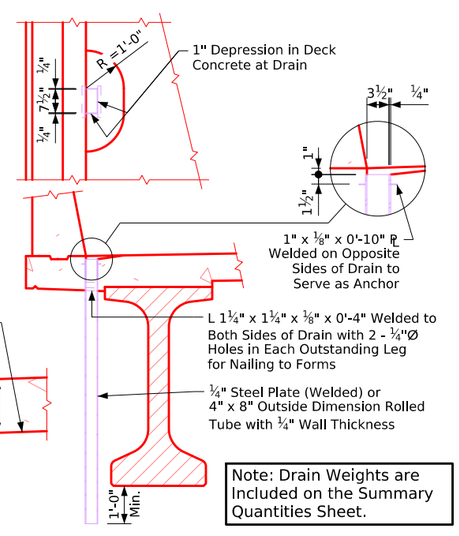

Note: Drain Weights are Included on the Summary Quantities Sheet.

Drain Details

Note: Drains are to be galvanized. ?? Drains required. See "Situation Plan" on Design Sheet No. ? for location. Weight of drains is included in the quantity for "Structural Steel". Weight is based on rolled tube.

Data for One Drain	
Beam Size	BTB
Drain Weight (lbs.)	92
Drain Length (ft.)	4'-9¾"

Superstructure Notes:

The bridge deck as shown includes ¾" integral wearing surface.

The pier and abutment diaphragm concrete is to be placed monolithically with the bridge deck.

Cost of all resilient joint filler material is to be included in the price bid for "Structural Concrete (Bridge)".

All beams are to be set vertical.

Forms for the deck and barrier rail are to be supported by the prestressed concrete beams.

Clear distance from face of concrete to near reinforcing bar shall be 2" unless otherwise noted or shown.

All deck and diaphragm reinforcing is to be wired in place and adequately supported before concrete is placed.

Top transverse reinforcing steel is to be parallel to and 2¾" clear below top of deck. Bottom transverse reinforcing steel is to be parallel to and 1½" clear above bottom of deck. Top and bottom reinforcing steel is to be supported by individual bar chairs spaced at not more than 3'-0" centers longitudinally and transversely, or by continuous rows of bar high chairs or deck bolsters spaced 4'-0" apart. I.M. 451.01 requirements shall apply for bar chairs, bar high chairs, and deck bolsters.

Transverse deck reinforcing may be spliced with one lap located as follows:

Top bar - lap midway between beams (min. lap = 2'-10").

Bottom bars - lap over beams (min. lap = 3'-7").

Payment for reinforcing bars shall be based on no splices, and no allowance shall be made for the additional length of bar required for the use of splices.

Cost for bearing material is to be included in the price bid for "Pretensioned Prestressed Concrete Beams".

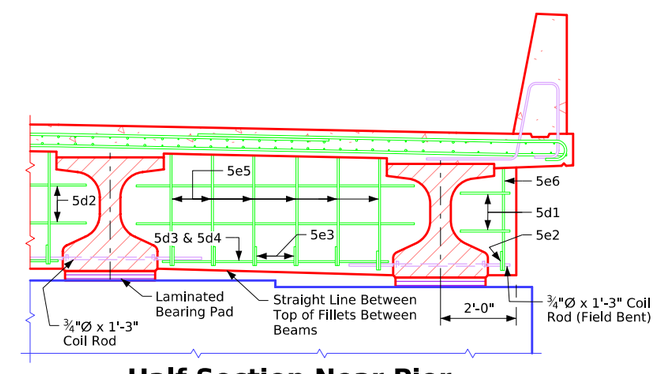

Half Section Near Pier

(Expansion Pier Shown)

Bridge Deck Cross Section

Correction 04-14: Added Referral Note to Summary Quantities Sheet for the Drain Weight. Not About Choice of Epoxy or Stainless Steel Deck to Barrier Rail Bars.
Revised 05-2026: In "Drain Details", corrected typo of deck drain radius to R=1'-0" (Typo Was R=2'-0"). In "Half Section Near Pier" details changed Coil Rod to Field Bent (was labeled Bent).
Revised 06-2026: Added horizontal Beam Spacing dimension on cross section details. Was inadvertently changed when dimension style was updated.
BTIntegralBridges.dgn - 4380-BTB-4 - Issued 02-08. This Sheet Re-Issued 11-2023. Sheet Format Update.

Table of Size of "b2" Bar

Longest Adjacent Span	BTB Beam Bar Size
30'-0"	**4
35'-0"	**4
40-'0"	**4
45-0"	**5
50'-0"	**6
55'-0"	**6
60'-0"	**6
65'-0"	**7
70'-0"	**8
75'-0"	**8
80'-0"	**9
85'-0"	7
90'-0"	8
95'-0"	8
100'-0"	8
105'-0"	9

The midpoint of the 'b2' bar is to be placed at the ℄ of pier.
** Indicates 'b2' bar placed in top deck only.

Note to Designer:
6j1 spacing shown for TL-4 barrier.
See Bridge Design Manual
Section 5.2 for TL-5 6j1 spacing.

Deck area = 24.03 Sq. Ft.
Deck area does not include the nominal ½" haunch.

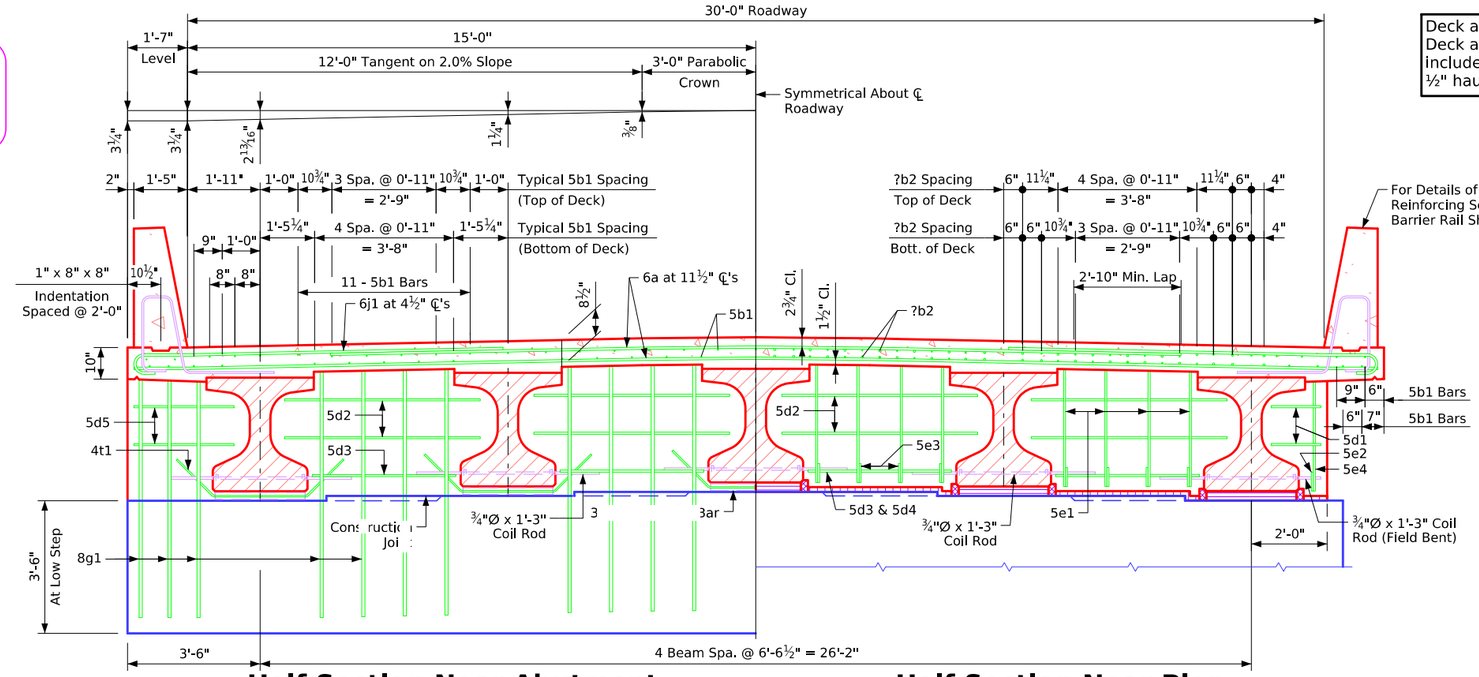

Half Section Near Abutment **Half Section Near Pier**

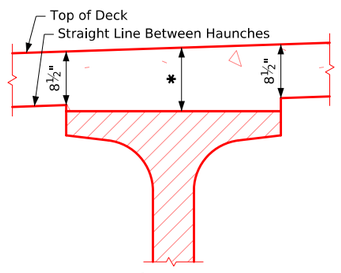

Interior Beams

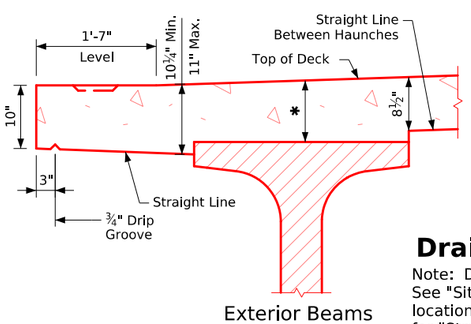

Exterior Beams

Typical Deck and Haunch Detail

* For Deck Thickness Over Beams See "Haunch And Camber Details" on Design Sheet No. ?.

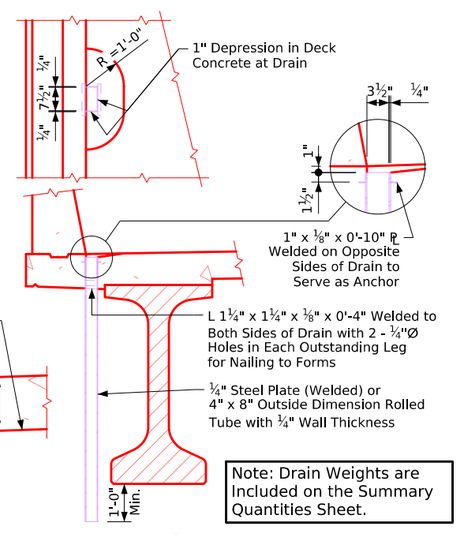

Note: Drain Weights are Included on the Summary Quantities Sheet.

Drain Details

Note: Drains are to be galvanized. ?? Drains required. See "Situation Plan" on Design Sheet No. ? for location. Weight of drains is included in the quantity for "Structural Steel". Weight is based on rolled tube.

Data for One Drain

Beam Size	BTB
Drain Weight (lbs.)	92
Drain Length (ft.)	4'-9¾"

Note: For details of Intermediate Diaphragm see Design Sheet No. ??.

Superstructure Notes:

The bridge deck as shown includes ¾" integral wearing surface.

The pier and abutment diaphragm concrete is to be placed monolithically with the bridge deck.

Cost of all resilient joint filler material is to be included in the price bid for "Structural Concrete (Bridge)".

All beams are to be set vertical.

Forms for the deck and barrier rail are to be supported by the prestressed concrete beams.

Clear distance from face of concrete to near reinforcing bar shall be 2" unless otherwise noted or shown.

All deck and diaphragm reinforcing is to be wired in place and adequately supported before concrete is placed.

Top transverse reinforcing steel is to be parallel to and 2¾" clear below top of deck. Bottom transverse reinforcing steel is to be parallel to and 1½" clear above bottom of deck. Top and bottom reinforcing steel is to be supported by individual bar chairs spaced at not more than 3'-0" centers longitudinally and transversely, or by continuous rows of bar high chairs or deck bolsters spaced 4'-0" apart. I.M. 451.01 requirements shall apply for bar chairs, bar high chairs, and deck bolsters.

Transverse deck reinforcing may be spliced with one lap located as follows:

Top bar - lap midway between beams (min. lap = 2'-10").

Bottom bars - lap over beams (min. lap = 3'-7").

Payment for reinforcing bars shall be based on no splices, and no allowance shall be made for the additional length of bar required for the use of splices.

Cost for bearing material is to be included in the price bid for "Pretensioned Prestressed Concrete Beams".

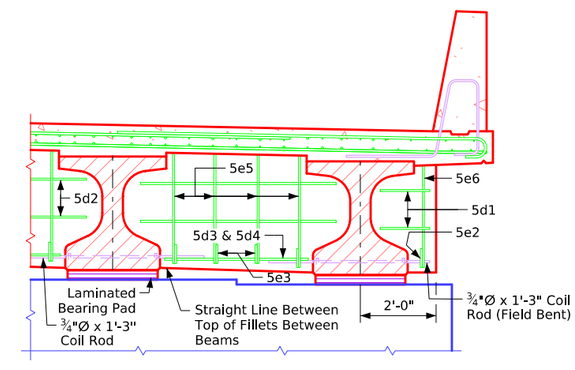

Half Section Near Pier
(Expansion Pier Shown)

Bridge Deck Cross Section

Correction 04-14: Added Concrete Quantity Table & Referral Note to Summary Quantity Sheet. Removed Design Bearing Note for Abut. Piling from Abutment Notes.
Revised 05-2026: In "Drain Details", corrected typo of deck drain radius to R=1'-0" (Typo Was R=2'-0"). In "Half Section Near Pier" details changed Coil Rod to Field Bent (was labeled Bent).
Revised 06-2026: Added horizontal Beam Spacing dimension on cross section details. Was inadvertently changed when dimension style was updated.
BTIntegralBridges.dgn - 4380-BTB-5 - Issued 02-08. This Sheet Re-Issued 11-2023. Sheet Format Update.

Table of Size of "b2" Bar

Longest Adjacent Span	BTC Beam Bar Size
30'-0"	**4
35'-0"	**4
40-'0"	**4
45-0"	**4
50'-0"	**4
55'-0"	**4
60'-0"	**6
65'-0"	**7
70'-0"	**7
75'-0"	**8
80'-0"	**9
85'-0"	**9
90'-0"	7
95'-0"	7
100'-0"	8
105'-0"	8
110'-0"	8
115'-0"	8
120'-0"	8

The midpoint of the 'b2' bar is to be placed at the ℄ of pier.
** Indicates 'b2' bar placed in top deck only.

Note to Designer:
6j1 spacing shown for TL-4 barrier.
See Bridge Design Manual
Section 5.2 for TL-5 6j1 spacing.

Deck area = 24.03 Sq. Ft.
deck area does not
include the nominal
½" haunch.

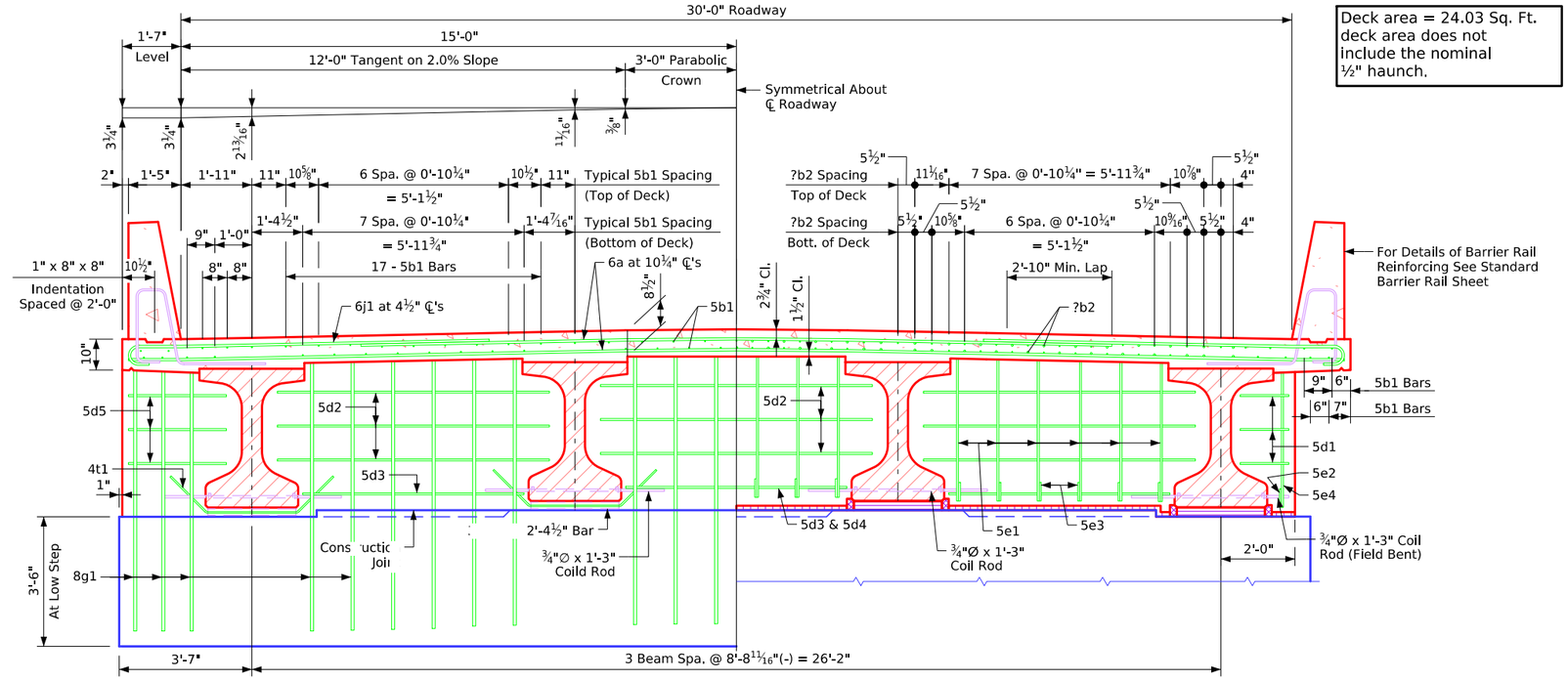

Half Section Near Abutment **Half Section Near Pier**

Note: For details of
Intermediate Diaphragm
see Design Sheet No. ??.

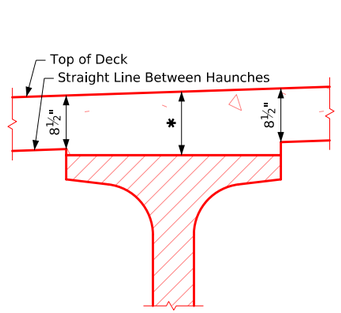

Interior Beams

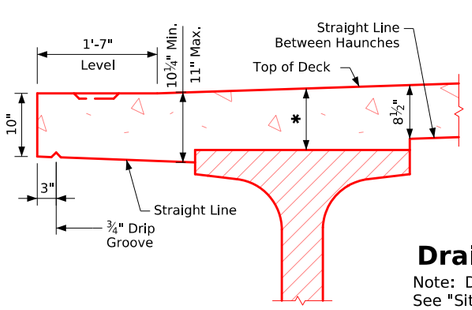

Exterior Beams

Typical Deck and Haunch Detail

* For Deck Thickness Over Beams See "Haunch And Camber Details" on Design Sheet No. ?.

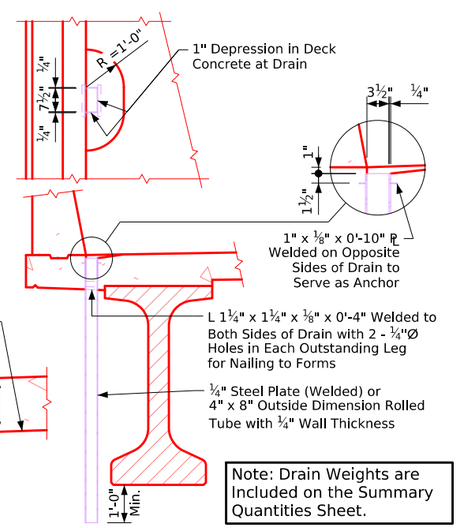

Note: Drain Weights are Included on the Summary Quantities Sheet.

Drain Details

Note: Drains are to be galvanized. ?? Drains required. See "Situation Plan" on Design Sheet No. ? for location. Weight of drains is included in the quantity for "Structural Steel". Weight is based on rolled tube.

Data for One Drain	
Beam Size	BTC
Drain Weight (lbs.)	106
Drain Length (ft.)	5'-6¾"

Superstructure Notes:

The bridge deck as shown includes ¾" integral wearing surface.

The pier and abutment diaphragm concrete is to be placed monolithically with the bridge deck.

Cost of all resilient joint filler material is to be included in the price bid for "Structural Concrete (Bridge)".

All beams are to be set vertical.

Forms for the deck and barrier rail are to be supported by the prestressed concrete beams.

Clear distance from face of concrete to near reinforcing bar shall be 2" unless otherwise noted or shown.

All deck and diaphragm reinforcing is to be wired in place and adequately supported before concrete is placed.

Top transverse reinforcing steel is to be parallel to and 2¾" clear below top of deck. Bottom transverse reinforcing steel is to be parallel to and 1½" clear above bottom of deck. Top and bottom reinforcing steel is to be supported by individual bar chairs spaced at not more than 3'-0" centers longitudinally and transversely, or by continuous rows of bar high chairs or deck bolsters spaced 4'-0" apart. I.M. 451.01 requirements shall apply for bar chairs, bar high chairs, and deck bolsters.

Transverse deck reinforcing may be spliced with one lap located as follows:

Top bar - lap midway between beams (min. lap = 2'-10").

Bottom bars - lap over beams (min. lap = 3'-7").

Payment for reinforcing bars shall be based on no splices, and no allowance shall be made for the additional length of bar required for the use of splices.

Cost for bearing material is to be included in the price bid for "Pretensioned Prestressed Concrete Beams".

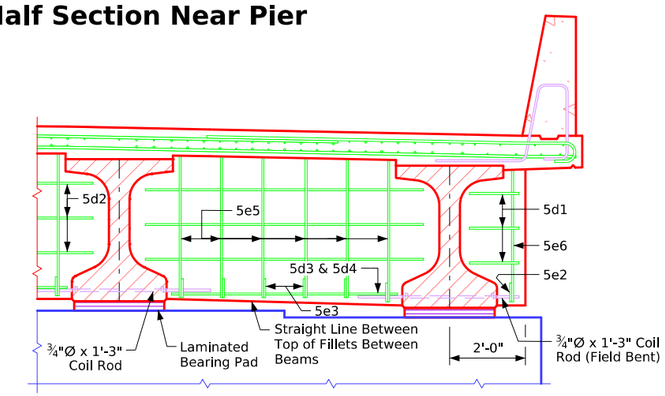

Half Section Near Pier
(Expansion Pier Shown)

Bridge Deck Cross Section

Correction 04-14: Added Concrete Quantity Table & Referral Note to Summary Quantity Sheet. Removed Design Bearing Note for Abut. Piling from Abutment Notes.
Revised 05-2026: In "Drain Details", corrected typo of deck drain radius to R=1'-0" (Typo Was R=2'-0"). In "Half Section Near Pier" details changed Coil Rod to Field Bent (was labeled Bent).
Revised 06-2026: Added horizontal Beam Spacing dimension on cross section details. Was inadvertently changed when dimension style was updated.
BTIntegralBridges.dgn - 4380-BTC-4 - Issued 02-08. This Sheet Re-Issued 11-2023. Sheet Format Update.

FILE NO.	ENGLISH	DESIGN TEAM	30' Roadway PPCB (BTC Beams - Integral Abut.) Cross Section (Spans 30' - 120')	Standard Sheet 4380-BTC-4	COUNTY	PROJECT NUMBER	SHEET NUMBER

8:25:30 AM 6/11/2026 bkloss pw:\\NTPwint1.dot.int.lan:PWMain\Documents\Highway\Bridge\Standards\Bridges\BTIntegralBridges.dgn

Table of Size of "b2" Bar

Longest Adjacent Span	BTD Beam Bar Size
30'-0"	------
35'-0"	------
40-'0"	------
45-0"	------
50'-0"	**4
55'-0"	**4
60'-0"	**5
65'-0"	**6
70'-0"	**6
75'-0"	**7
80'-0"	**8
85'-0"	**8
90'-0"	**9
95'-0"	**9
100'-0"	7
105'-0"	7
110'-0"	8
115'-0"	8
120'-0"	8
125'-0"	8
130'-0"	9
135'-0"	9

The midpoint of the 'b2' bar is to be placed at the ℄ of pier.
** Indicates 'b2' bar placed in top deck only.

Note to Designer:
6j1 spacing shown for TL-4 barrier.
See Bridge Design Manual
Section 5.2 for TL-5 6j1 spacing.

Deck area = 24.03 Sq. Ft.
Deck area does not include the nominal ½" haunch.

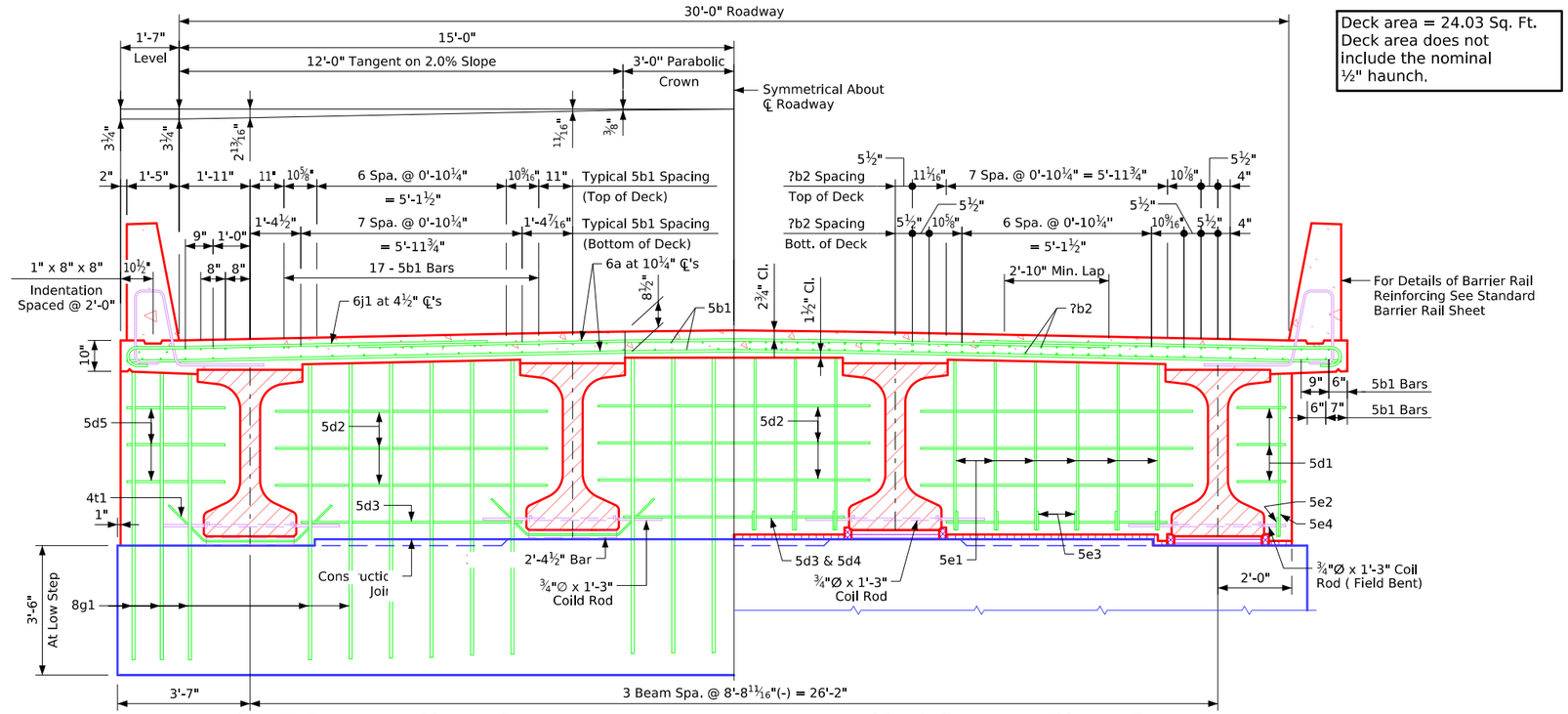

Half Section Near Abutment

Half Section Near Pier

Note: For details of Intermediate Diaphragm see Design Sheet No. ??.

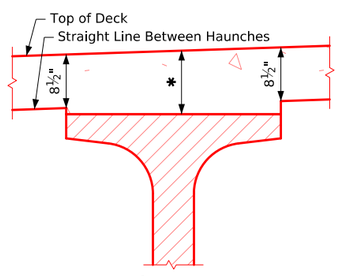

Interior Beams

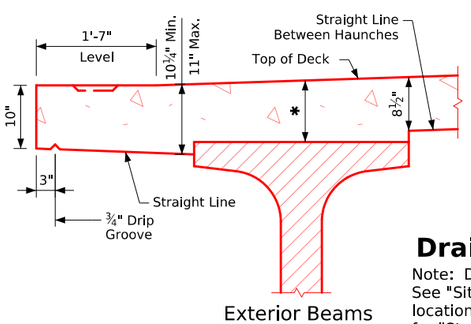

Exterior Beams

Typical Deck and Haunch Detail

* For Deck Thickness Over Beams See "Haunch And Camber Details" on Design Sheet No. ?.

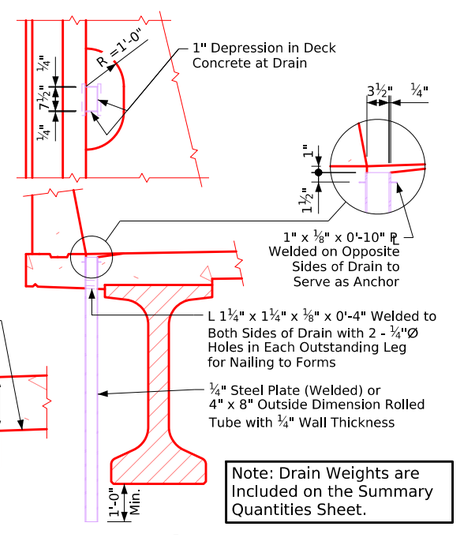

Note: Drain Weights are Included on the Summary Quantities Sheet.

Drain Details

Note: Drains are to be galvanized. ?? Drains required. See "Situation Plan" on Design Sheet No. ? for location. Weight of drains is included in the quantity for "Structural Steel". Weight is based on rolled tube.

Data for One Drain

Beam Size	BTD
Drain Weight (lbs.)	120
Drain Length (ft.)	6'-3¾"

Superstructure Notes:

The bridge deck as shown includes ¾" integral wearing surface.

The pier and abutment diaphragm concrete is to be placed monolithically with the bridge deck.

Cost of all resilient joint filler material is to be included in the price bid for "Structural Concrete (Bridge)".

All beams are to be set vertical.

Forms for the deck and barrier rail are to be supported by the prestressed concrete beams.

Clear distance from face of concrete to near reinforcing bar shall be 2" unless otherwise noted or shown.

All deck and diaphragm reinforcing is to be wired in place and adequately supported before concrete is placed.

Top transverse reinforcing steel is to be parallel to and 2¾" clear below top of deck. Bottom transverse reinforcing steel is to be parallel to and 1½" clear above bottom of deck. Top and bottom reinforcing steel is to be supported by individual bar chairs spaced at not more than 3'-0" centers longitudinally and transversely, or by continuous rows of bar high chairs or deck bolsters spaced 4'-0" apart. I.M. 451.01 requirements shall apply for bar chairs, bar high chairs, and deck bolsters.

Transverse deck reinforcing may be spliced with one lap located as follows:

Top bar - lap midway between beams (min. lap = 2'-10").

Bottom bars - lap over beams (min. lap = 3'-7").

Payment for reinforcing bars shall be based on no splices, and no allowance shall be made for the additional length of bar required for the use of splices.

Cost for bearing material is to be included in the price bid for "Pretensioned Prestressed Concrete Beams".

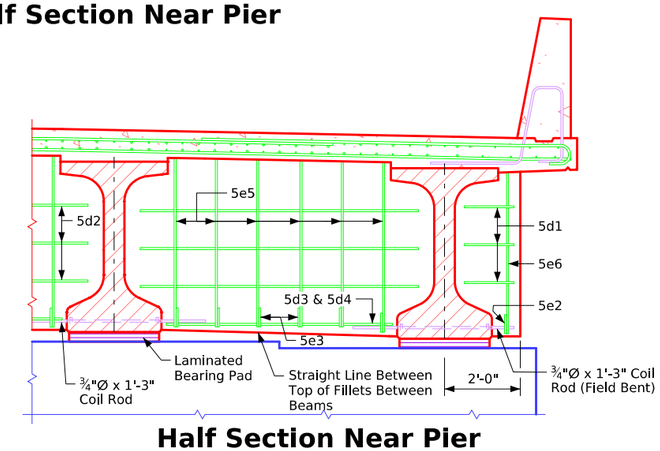

Half Section Near Pier

(Expansion Pier Shown)

Bridge Deck Cross Section

Correction 04-14: Added Concrete Quantity Table & Referral Note to Summary Quantity Sheet. Removed Design Bearing Note for Abut. Piling from Abutment Notes.
Revised 05-2026: In "Drain Details", corrected typo of deck drain radius to R=1'-0" (Typo Was R=2'-0"). In "Half Section Near Pier" details changed Coil Rod to Field Bent (was labeled Bent).
Revised 06-2026: Added horizontal Beam Spacing dimension on cross section details. Was inadvertently changed when dimension style was updated.
BTIntegralBridges.dgn - 4380-BTD-4 - Issued 02-08. This Sheet Re-Issued 11-2023. Sheet Format Update.

Table of Size of "b2" Bar

Longest Adjacent Span	BTE Beam Bar Size
30'-0"	------
35'-0"	------
40-'0"	------
45-0"	------
50'-0"	------
55'-0"	------
60'-0"	**4
65'-0"	**5
70'-0"	**6
75'-0"	**6
80'-0"	**7
85'-0"	**7
90'-0"	**8
95'-0"	**8
100'-0"	**9
105'-0"	**9
110'-0"	7
115'-0"	7
120'-0"	7
125'-0"	8
130'-0"	8
135'-0"	8
140'-0"	9
145'-0"	9
150'-0"	9
155'-0"	9

The midpoint of the 'b2' bar is to be placed at the ℄ of pier.
** Indicates 'b2' bar placed in top deck only.

Note to Designer:
6j1 spacing shown for TL-4 barrier.
See Bridge Design Manual
Section 5.2 for TL-5 6j1 spacing.

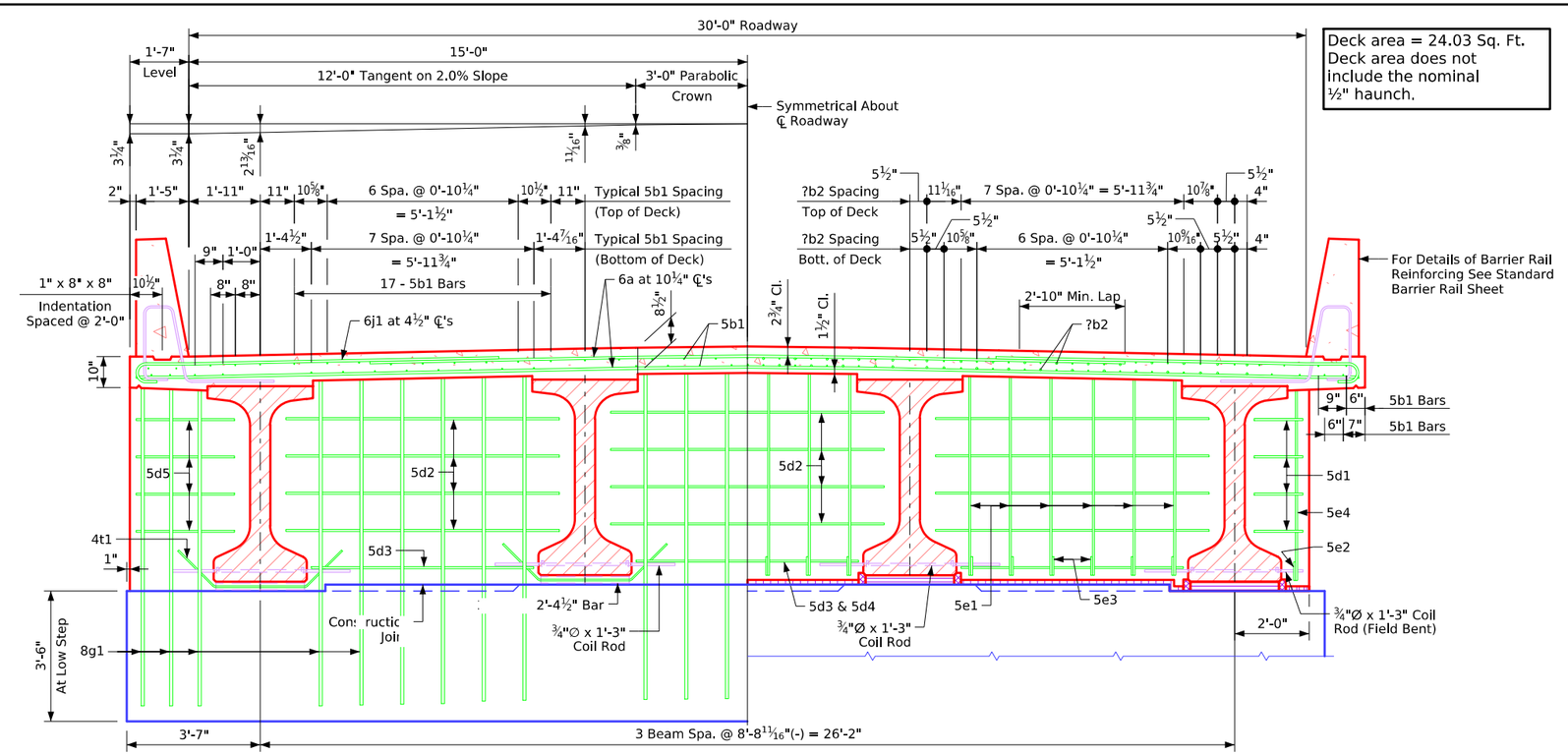

Half Section Near Abutment

Half Section Near Pier

Note: For details of Intermediate Diaphragm see Design Sheet No. ??.

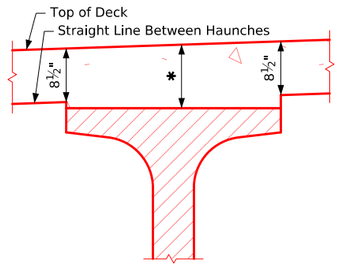

Interior Beams

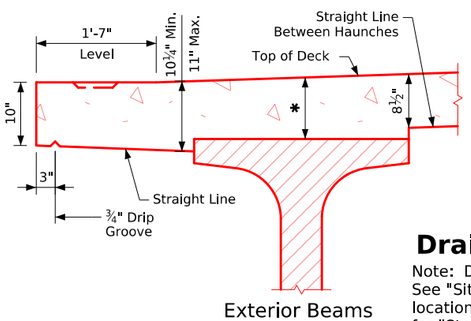

Exterior Beams

Typical Deck and Haunch Detail

* For Deck Thickness Over Beams See "Haunch And Camber Details" on Design Sheet No. ?.

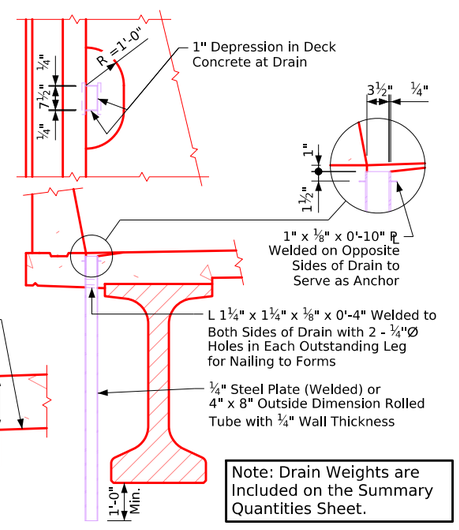

Note: Drain Weights are Included on the Summary Quantities Sheet.

Drain Details

Note: Drains are to be galvanized. ?? Drains required. See "Situation Plan" on Design Sheet No. ? for location. Weight of drains is included in the quantity for "Structural Steel". Weight is based on rolled tube.

Data for One Drain

Beam Size	BTE
Drain Weight (lbs.)	136
Drain Length (ft.)	7'-0¾"

Superstructure Notes:

The bridge deck as shown includes ¾" integral wearing surface.

The pier and abutment diaphragm concrete is to be placed monolithically with the bridge deck.

Cost of all resilient joint filler material is to be included in the price bid for "Structural Concrete (Bridge)".

All beams are to be set vertical.

Forms for the deck and barrier rail are to be supported by the prestressed concrete beams.

Clear distance from face of concrete to near reinforcing bar shall be 2" unless otherwise noted or shown.

All deck and diaphragm reinforcing is to be wired in place and adequately supported before concrete is placed.

Top transverse reinforcing steel is to be parallel to and 2¾" clear below top of deck. Bottom transverse reinforcing steel is to be parallel to and 1½" clear above bottom of deck. Top and bottom reinforcing steel is to be supported by individual bar chairs spaced at not more than 3'-0" centers longitudinally and transversely, or by continuous rows of bar high chairs or deck bolsters spaced 4'-0" apart. I.M. 451.01 requirements shall apply for bar chairs, bar high chairs, and deck bolsters.

Transverse deck reinforcing may be spliced with one lap located as follows:

Top bar - lap midway between beams (min. lap = 2'-10").

Bottom bars - lap over beams (min. lap = 3'-7").

Payment for reinforcing bars shall be based on no splices, and no allowance shall be made for the additional length of bar required for the use of splices.

Cost for bearing material is to be included in the price bid for "Pretensioned Prestressed Concrete Beams".

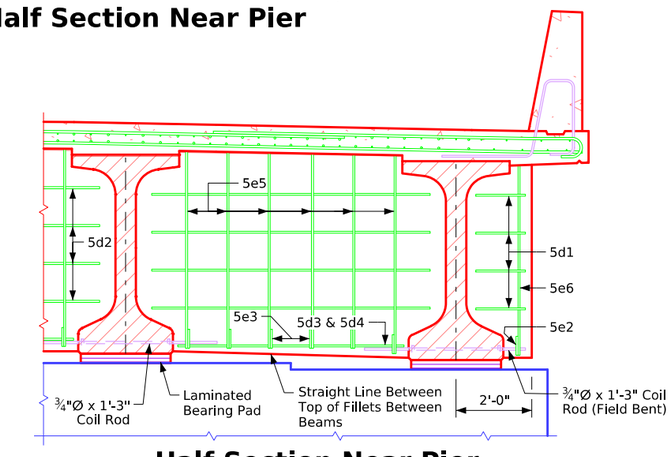

Half Section Near Pier

(Expansion Pier Shown)

Bridge Deck Cross Section

Correction 04-14: Added Concrete Quantity Table & Referral Note to Summary Quantity Sheet. Removed Design Bearing Note for Abut. Piling from Abutment Notes.
Revised 05-2026: In "Drain Details", corrected typo of deck drain radius to R=1'-0" (Typo Was R=2'-0"). In "Half Section Near Pier" details changed Coil Rod to Field Bent (was labeled Bent).
Revised 06-2026: Added horizontal Beam Spacing dimension on cross section details. Was inadvertently changed when dimension style was updated.
BTIntegralBridges.dgn - 4380-BTE-4 - Issued 02-08. This Sheet Re-Issued 11-2023. Sheet Format Update.

FILE NO.	ENGLISH	DESIGN TEAM	30' Roadway PPCB (BTE Beams - Integral Abut.) Cross Section (Spans 60' - 150')	Standard Sheet 4380-BTE-4	COUNTY	PROJECT NUMBER	SHEET NUMBER

8:25:31 AM 6/11/2026 bkloss pw:\\NTPwint1.dot.int.lan:PWMain\Documents\Highway\Bridge\Standards\Bridges\BTIntegralBridges.dgn

Table of Size of "b2" Bar

Longest Adjacent Span	BTE Beam Bar Size
30'-0"	------
35'-0"	------
40-'0"	------
45-0"	------
50'-0"	------
55'-0"	------
60'-0"	**4
65'-0"	**5
70'-0"	**6
75'-0"	**6
80'-0"	**7
85'-0"	**7
90'-0"	**8
95'-0"	**8
100'-0"	**9
105'-0"	**9
110'-0"	7
115'-0"	7
120'-0"	7
125'-0"	8
130'-0"	8
135'-0"	8
140'-0"	9
145'-0"	9
150'-0"	9
155'-0"	9

The midpoint of the 'b2' bar is to be placed at the ¡ of pier.
** Indicates 'b2' bar placed in top deck only.

Note to Designer:
6j1 spacing shown for TL-4 barrier.
See Bridge Design Manual
Section 5.2 for TL-5 6j1 spacing.

Deck area = 24.03 Sq. Ft.
Deck area does not include the nominal ½" haunch.

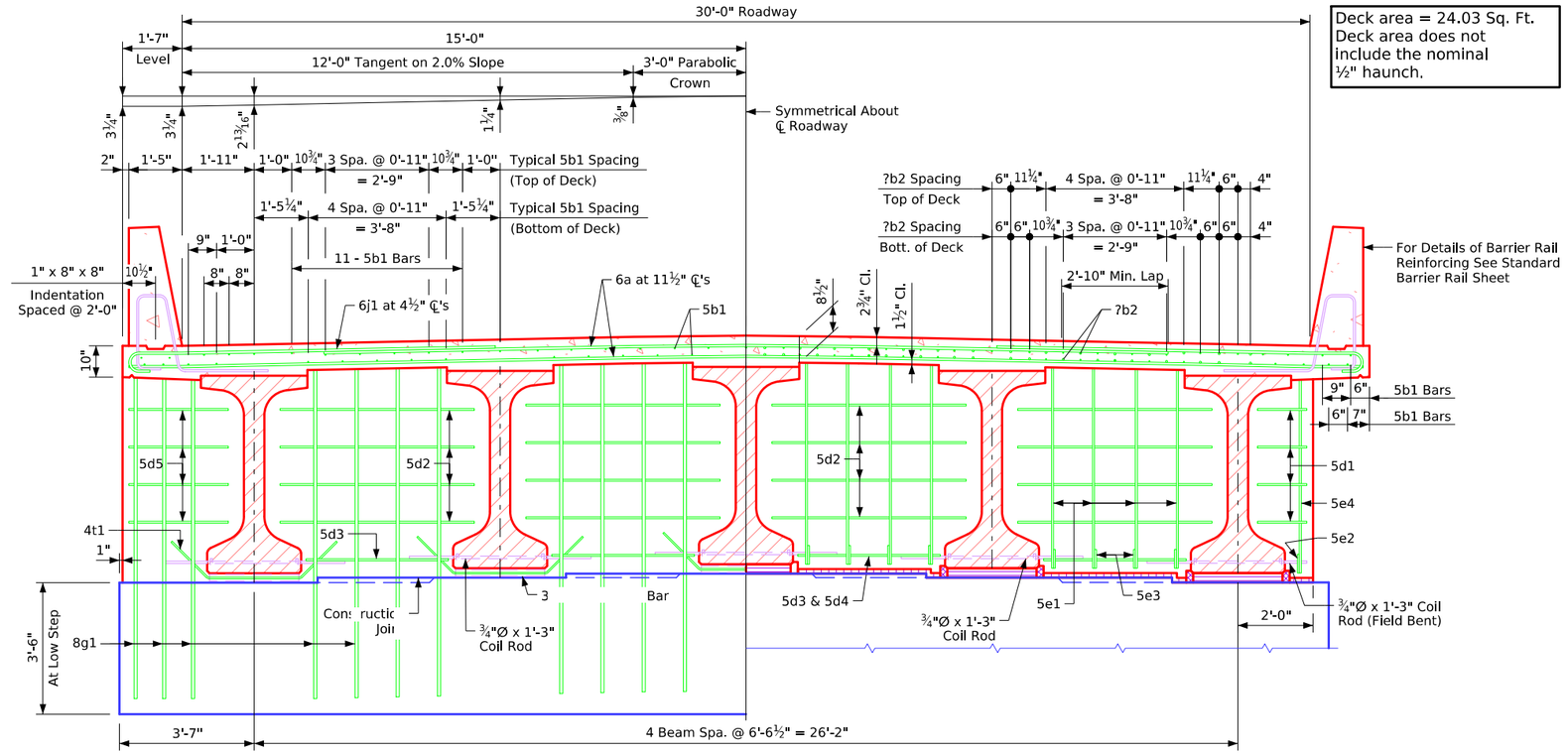

Half Section Near Abutment

Half Section Near Pier

Note: For details of Intermediate Diaphragm see Design Sheet No. ??.

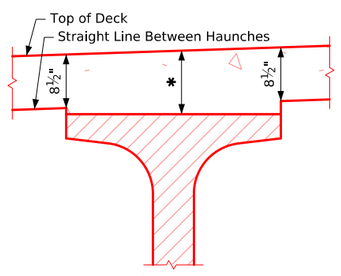

Interior Beams

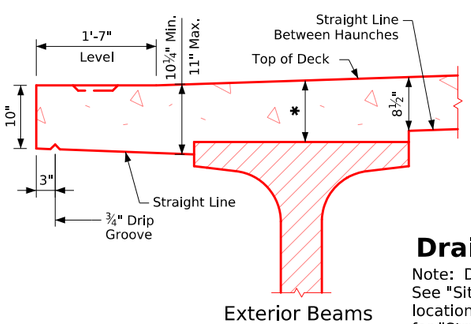

Exterior Beams

Typical Deck and Haunch Detail

* For Deck Thickness Over Beams See "Haunch And Camber Details" on Design Sheet No. ?.

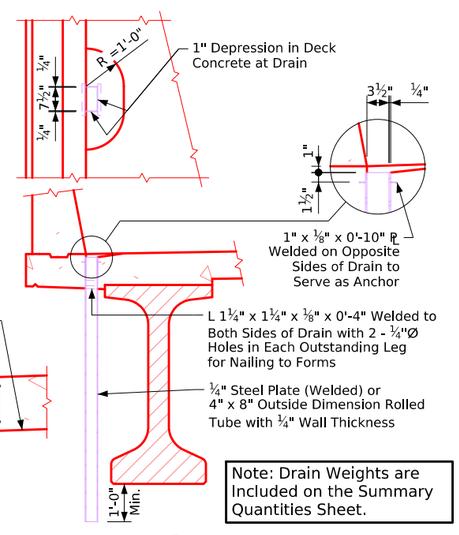

Note: Drain Weights are Included on the Summary Quantities Sheet.

Drain Details

Note: Drains are to be galvanized. ?? Drains required. See "Situation Plan" on Design Sheet No. ? for location. Weight of drains is included in the quantity for "Structural Steel". Weight is based on rolled tube.

Data for One Drain

Beam Size	BTE
Drain Weight (lbs.)	136
Drain Length (ft.)	7'-0¾"

Superstructure Notes:

The bridge deck as shown includes ¾" integral wearing surface.

The pier and abutment diaphragm concrete is to be placed monolithically with the bridge deck.

Cost of all resilient joint filler material is to be included in the price bid for "Structural Concrete (Bridge)".

All beams are to be set vertical.

Forms for the deck and barrier rail are to be supported by the prestressed concrete beams.

Clear distance from face of concrete to near reinforcing bar shall be 2" unless otherwise noted or shown.

All deck and diaphragm reinforcing is to be wired in place and adequately supported before concrete is placed.

Top transverse reinforcing steel is to be parallel to and 2¾" clear below top of deck. Bottom transverse reinforcing steel is to be parallel to and 1½" clear above bottom of deck. Top and bottom reinforcing steel is to be supported by individual bar chairs spaced at not more than 3'-0" centers longitudinally and transversely, or by continuous rows of bar high chairs or deck bolsters spaced 4'-0" apart. I.M. 451.01 requirements shall apply for bar chairs, bar high chairs, and deck bolsters.

Transverse deck reinforcing may be spliced with one lap located as follows:

Top bar - lap midway between beams (min. lap = 2'-10").

Bottom bars - lap over beams (min. lap = 3'-7").

Payment for reinforcing bars shall be based on no splices, and no allowance shall be made for the additional length of bar required for the use of splices.

Cost for bearing material is to be included in the price bid for "Pretensioned Prestressed Concrete Beams".

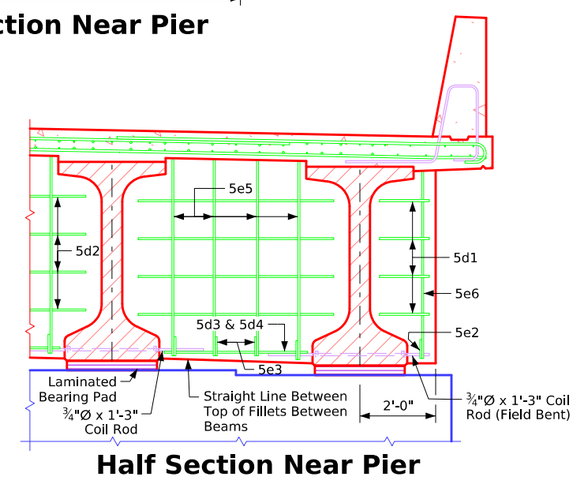

Half Section Near Pier

(Expansion Pier Shown)

Bridge Deck Cross Section

Correction 04-14: Added Concrete Quantity Table & Referral Note to Summary Quantity Sheet. Removed Design Bearing Note for Abut. Piling from Abutment Notes.
Revised 05-2026: In "Drain Details", corrected typo of deck drain radius to R=1'-0" (Typo Was R=2'-0"). In "Half Section Near Pier" details changed Coil Rod to Field Bent (was labeled Bent).
Revised 06-2026: Added horizontal Beam Spacing dimension on cross section details. Was inadvertently changed when dimension style was updated.
BTIntegralBridges.dgn - 4380-BTE-5 - Issued 02-08. This Sheet Re-Issued 11-2023. Sheet Format Update.

FILE NO.	ENGLISH	DESIGN TEAM	30' Roadway PPCB (BTE Beams - Integral Abut.) Cross Section (Span 155')	Standard Sheet 4380-BTE-5	COUNTY	PROJECT NUMBER	SHEET NUMBER

8:25:31 AM 6/11/2026 bkloss pw:\\NTPwint1.dot.int.lan:PWMain\Documents\Highway\Bridge\Standards\Bridges\BTIntegralBridges.dgn

Table of Size of "b2" Bar

Longest Adjacent Span	BTB Beam Bar Size
30'-0"	**4
35'-0"	**4
40'-0"	**4
45-0"	**5
50'-0"	**6
55'-0"	**6
60'-0"	**6
65'-0"	**7
70'-0"	**8
75'-0"	**8
80'-0"	**9
85'-0"	7
90'-0"	8
95'-0"	8
100'-0"	8
105'-0"	9

The midpoint of the 'b2' bar is to be placed at the ℄ of pier.
** Indicates 'b2' bar placed in top deck only.

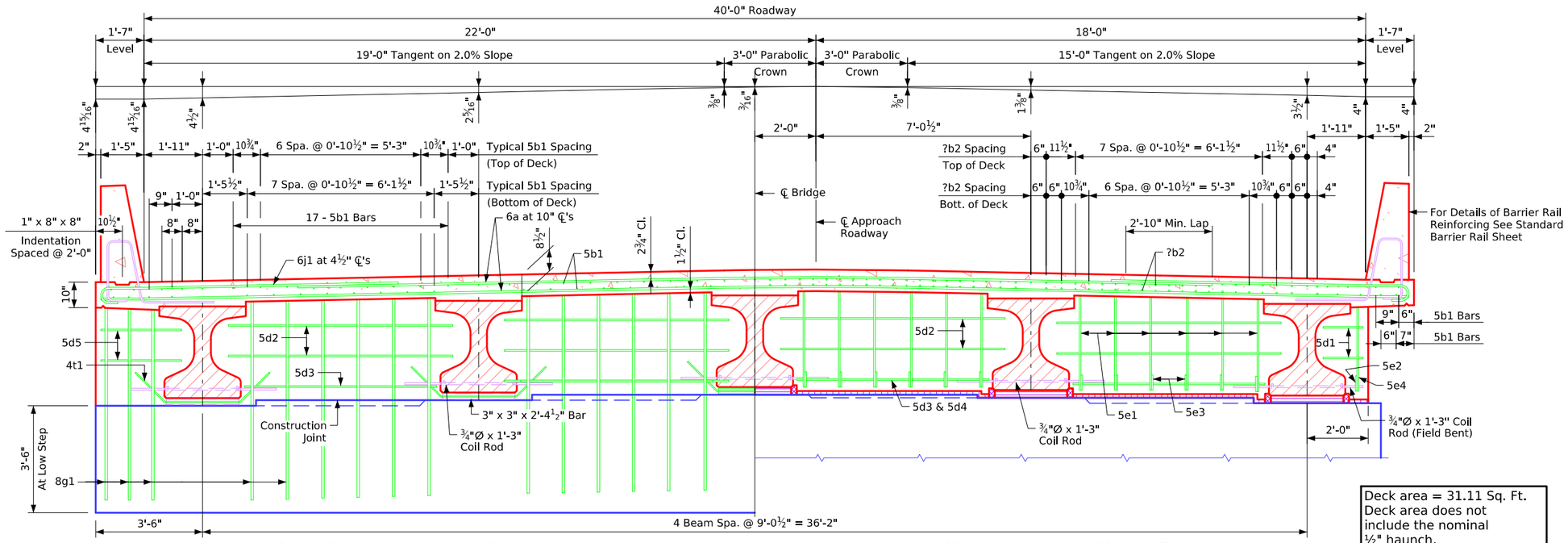

Half Section Near Abutment **Half Section Near Pier**

Deck area = 31.11 Sq. Ft.
Deck area does not include the nominal ½" haunch.

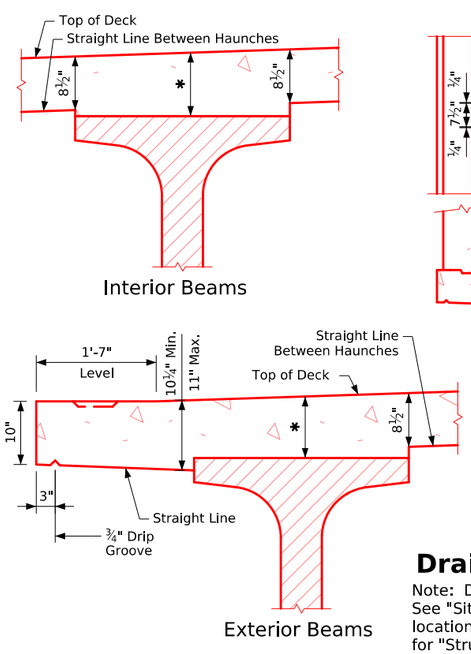

Typical Deck and Haunch Detail

* For Deck Thickness Over Beams See "Haunch And Camber Details" on Design Sheet No. ?.

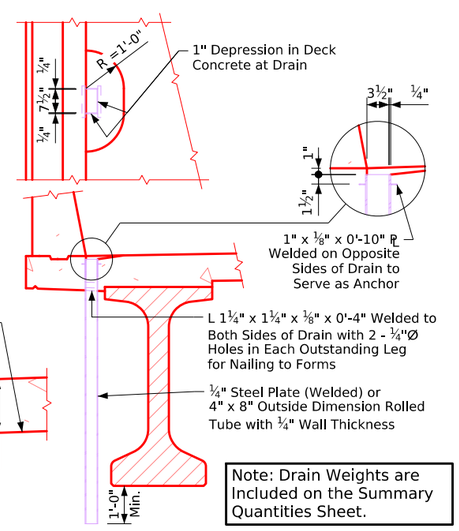

Note: Drain Weights are Included on the Summary Quantities Sheet.

Drain Details

Note: Drains are to be galvanized. ?? Drains required. See "Situation Plan" on Design Sheet No. ? for location. Weight of drains is included in the quantity for "Structural Steel". Weight is based on rolled tube.

Data for One Drain

Beam Size	BTB
Drain Weight (lbs.)	92
Drain Length (ft.)	4'-9¾"

Note: For details of Intermediate Diaphragm see Design Sheet No. ??.

Note to Designer:
6j1 spacing shown for TL-4 barrier.
See Bridge Design Manual Section 5.2 for TL-5 6j1 spacing.

Superstructure Notes:

The bridge deck as shown includes ¾" integral wearing surface.

The pier and abutment diaphragm concrete is to be placed monolithically with the bridge deck.

Cost of all resilient joint filler material is to be included in the price bid for "Structural Concrete (Bridge)".

All beams are to be set vertical.

Forms for the deck and barrier rail are to be supported by the prestressed concrete beams.

Clear distance from face of concrete to near reinforcing bar shall be 2" unless otherwise noted or shown.

All deck and diaphragm reinforcing is to be wired in place and adequately supported before concrete is placed.

Top transverse reinforcing steel is to be parallel to and 2¾" clear below top of deck. Bottom transverse reinforcing steel is to be parallel to and 1½" clear above bottom of deck. Top and bottom reinforcing steel is to be supported by individual bar chairs spaced at not more than 3'-0" centers longitudinally and transversely, or by continuous rows of bar high chairs or deck bolsters spaced 4'-0" apart. I.M. 451.01 requirements shall apply for bar chairs, bar high chairs, and deck bolsters.

Transverse deck reinforcing may be spliced with one lap located as follows:

Top bar - lap midway between beams (min. lap = 2'-10").

Bottom bars - lap over beams (min. lap = 3'-7").

Payment for reinforcing bars shall be based on no splices, and no allowance shall be made for the additional length of bar required for the use of splices.

Cost for bearing material is to be included in the price bid for "Pretensioned Prestressed Concrete Beams".

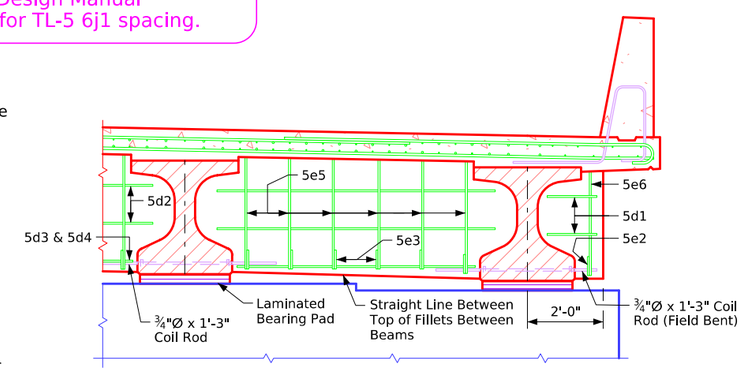

Half Section Near Pier
(Expansion Pier Shown)

Bridge Deck Cross Section

Note for Abut. Piling from Abutment Notes.
Revised 05-2026: In "Drain Details", corrected typo of deck drain radius to R=1'-0" (Typo Was R=2'-0"). In "Half Section Near Pier" details changed Coil Rod to Field Bent (was labeled Bent).
Revised 06-2026: Added horizontal Beam Spacing dimension on cross section details. Was inadvertently changed when dimension style was updated.
Correction 04-14: Added Concrete Quantity Table & Referral Note to Summary Quantity Sheet. Removed Design Bearing Note for Abut. Piling from Abutment Notes.
BTIntegralBridges.dgn - 4383-BTB-5 - Issued 02-08. This Sheet Re-Issued 11-2023. Sheet Format Update.

Table of Size of "b2" Bar

Longest Adjacent Span	BTB Beam Bar Size
30'-0"	**4
35'-0"	**4
40'-0"	**4
45-0"	**5
50'-0"	**6
55'-0"	**6
60'-0"	**6
65'-0"	**7
70'-0"	**8
75'-0"	**8
80'-0"	**9
85'-0"	7
90'-0"	8
95'-0"	8
100'-0"	8
105'-0"	9

The midpoint of the 'b2' bar is to be placed at the ℄ of pier.
** Indicates 'b2' bar placed in top deck only.

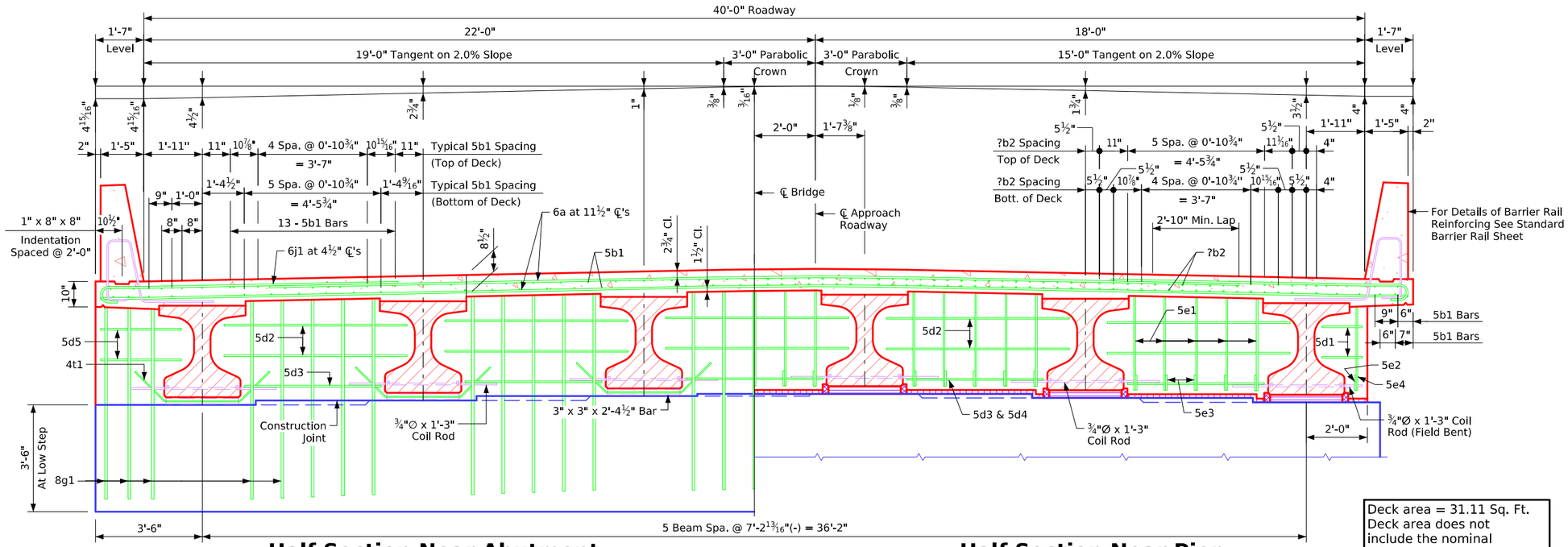

Half Section Near Abutment

Half Section Near Pier

Deck area = 31.11 Sq. Ft.
Deck area does not include the nominal ½" haunch.

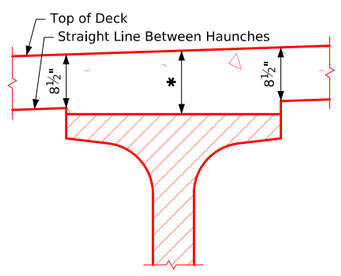

Interior Beams

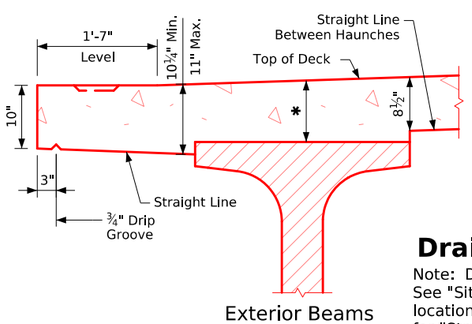

Exterior Beams

Typical Deck and Haunch Detail

* For Deck Thickness Over Beams See "Haunch And Camber Details" on Design Sheet No. ?.

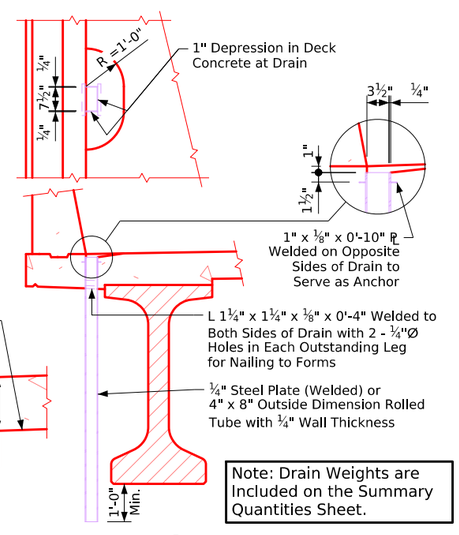

Note: Drain Weights are Included on the Summary Quantities Sheet.

Drain Details

Note: Drains are to be galvanized. ?? Drains required. See "Situation Plan" on Design Sheet No. ? for location. Weight of drains is included in the quantity for "Structural Steel". Weight is based on rolled tube.

Data for One Drain

Beam Size	BTB
Drain Weight (lbs.)	92
Drain Length (ft.)	4'-9¾"

Note: For details of Intermediate Diaphragm see Design Sheet No. ??.

Note to Designer:
6j1 spacing shown for TL-4 barrier.
See Bridge Design Manual Section 5.2 for TL-5 6j1 spacing.

Superstructure Notes:

The bridge deck as shown includes ¾" integral wearing surface.

The pier and abutment diaphragm concrete is to be placed monolithically with the bridge deck.

Cost of all resilient joint filler material is to be included in the price bid for "Structural Concrete (Bridge)".

All beams are to be set vertical.

Forms for the deck and barrier rail are to be supported by the prestressed concrete beams.

Clear distance from face of concrete to near reinforcing bar shall be 2" unless otherwise noted or shown.

All deck and diaphragm reinforcing is to be wired in place and adequately supported before concrete is placed.

Top transverse reinforcing steel is to be parallel to and 2¾" clear below top of deck. Bottom transverse reinforcing steel is to be parallel to and 1½" clear above bottom of deck. Top and bottom reinforcing steel is to be supported by individual bar chairs spaced at not more than 3'-0" centers longitudinally and transversely, or by continuous rows of bar high chairs or deck bolsters spaced 4'-0" apart. I.M. 451.01 requirements shall apply for bar chairs, bar high chairs, and deck bolsters.

Transverse deck reinforcing may be spliced with one lap located as follows:

Top bar - lap midway between beams (min. lap = 2'-10").

Bottom bars - lap over beams (min. lap = 3'-7").

Payment for reinforcing bars shall be based on no splices, and no allowance shall be made for the additional length of bar required for the use of splices.

Cost for bearing material is to be included in the price bid for "Pretensioned Prestressed Concrete Beams".

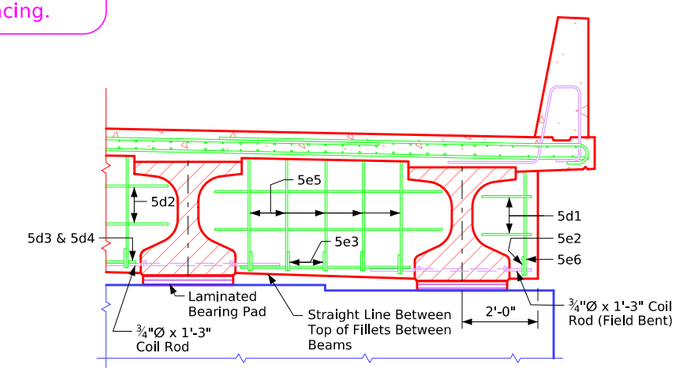

Half Section Near Pier

(Expansion Pier Shown)

Bridge Deck Cross Section

Correction 04-14: Added Concrete Quantity Table & Referral Note to Summary Quantity Sheet. Removed Design Bearing Note for Abut. Piling from Abutment Notes.
Revised 05-2026: In "Drain Details", corrected typo of deck drain radius to R=1'-0" (Typo Was R=2'-0"). In "Half Section Near Pier" details changed Coil Rod to Field Bent (was labeled Bent).
Revised 06-2026: Added horizontal Beam Spacing dimension on cross section details. Was inadvertently changed when dimension style was updated.
BTIntegralBridges.dgn - 4383-BTB-6 - Issued 02-08. This Sheet Re-Issued 11-2023. Sheet Format Update.

Table of Size of "b2" Bar

Longest Adjacent Span	BTC Beam Bar Size
30'-0"	**4
35'-0"	**4
40'-0"	**4
45-0"	**4
50'-0"	**4
55'-0"	**4
60'-0"	**6
65'-0"	**7
70'-0"	**7
75'-0"	**8
80'-0"	**9
85'-0"	**9
90'-0"	7
95'-0"	7
100'-0"	8
105'-0"	8
110'-0"	8
115'-0"	8
120'-0"	8

The midpoint of the 'b2' bar is to be placed at the ℄ of pier.
** Indicates 'b2' bar placed in top deck only.

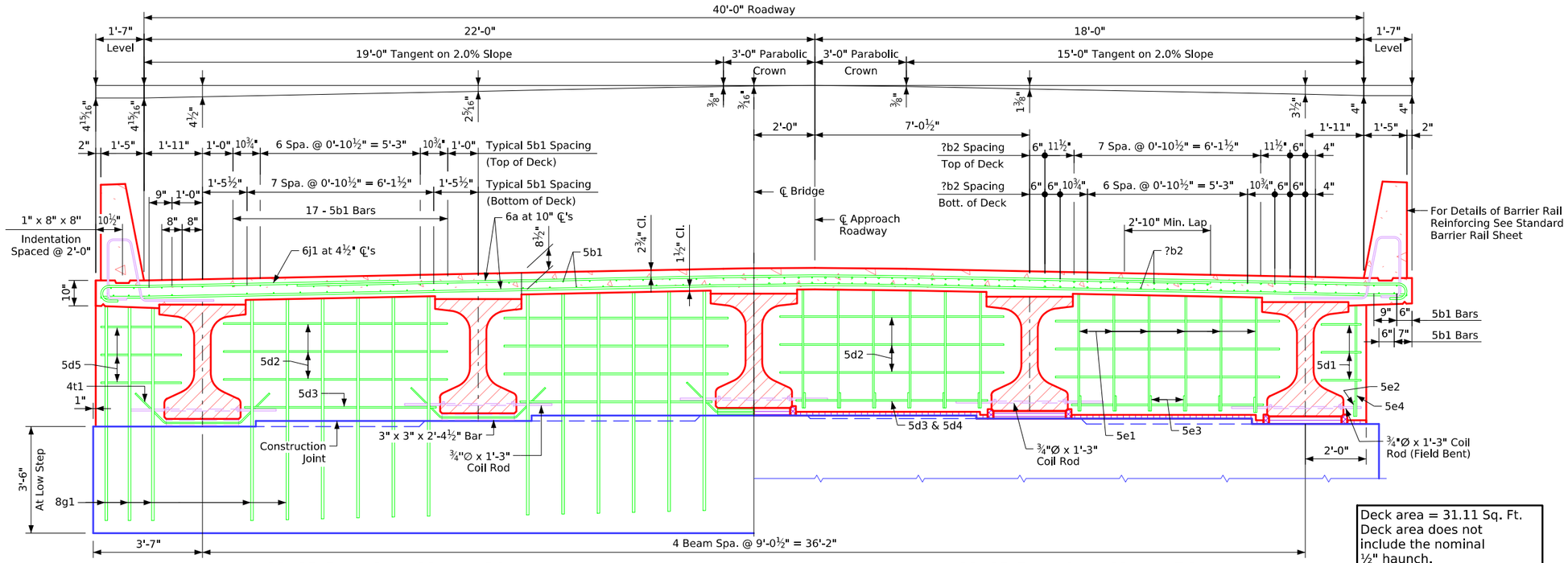

Half Section Near Abutment

Half Section Near Pier

Deck area = 31.11 Sq. Ft.
Deck area does not include the nominal ½" haunch.

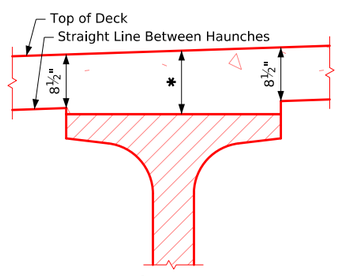

Interior Beams

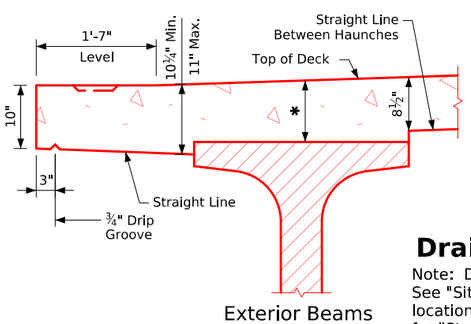

Exterior Beams

Typical Deck and Haunch Detail

* For Deck Thickness Over Beams See "Haunch And Camber Details" on Design Sheet No. ?.

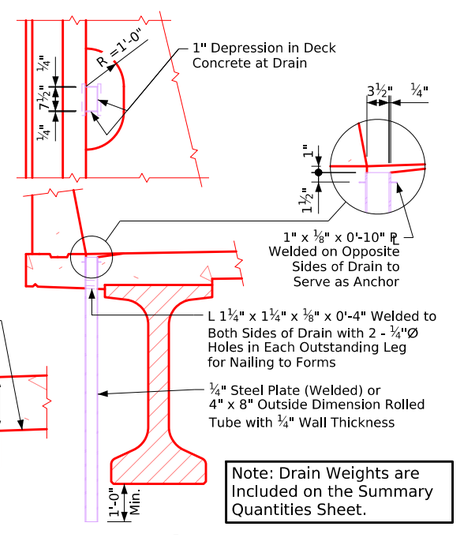

Note: Drain Weights are Included on the Summary Quantities Sheet.

Drain Details

Note: Drains are to be galvanized. ?? Drains required. See "Situation Plan" on Design Sheet No. ? for location. Weight of drains is included in the quantity for "Structural Steel". Weight is based on rolled tube.

Data for One Drain	
Beam Size	BTC
Drain Weight (lbs.)	106
Drain Length (ft.)	5'-6¾"

Note: For details of Intermediate Diaphragm see Design Sheet No. ??.

Note to Designer:
6j1 spacing shown for TL-4 barrier.
See Bridge Design Manual Section 5.2 for TL-5 6j1 spacing.

Superstructure Notes:

The bridge deck as shown includes ¾" integral wearing surface.

The pier and abutment diaphragm concrete is to be placed monolithically with the bridge deck.

Cost of all resilient joint filler material is to be included in the price bid for "Structural Concrete (Bridge)".

All beams are to be set vertical.

Forms for the deck and barrier rail are to be supported by the prestressed concrete beams.

Clear distance from face of concrete to near reinforcing bar shall be 2" unless otherwise noted or shown.

All deck and diaphragm reinforcing is to be wired in place and adequately supported before concrete is placed.

Top transverse reinforcing steel is to be parallel to and 2¾" clear below top of deck. Bottom transverse reinforcing steel is to be parallel to and 1½" clear above bottom of deck. Top and bottom reinforcing steel is to be supported by individual bar chairs spaced at not more than 3'-0" centers longitudinally and transversely, or by continuous rows of bar high chairs or deck bolsters spaced 4'-0" apart. I.M. 451.01 requirements shall apply for bar chairs, bar high chairs, and deck bolsters.

Transverse deck reinforcing may be spliced with one lap located as follows:

Top bar - lap midway between beams (min. lap = 2'-10").

Bottom bars - lap over beams (min. lap = 3'-7").

Payment for reinforcing bars shall be based on no splices, and no allowance shall be made for the additional length of bar required for the use of splices.

Cost for bearing material is to be included in the price bid for "Pretensioned Prestressed Concrete Beams".

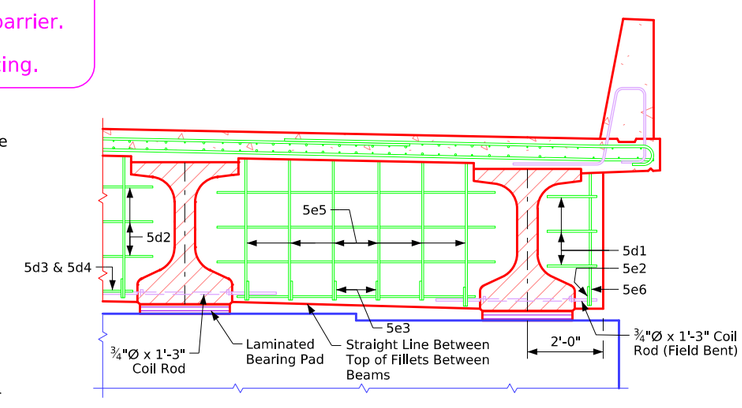

Half Section Near Pier
(Expansion Pier Shown)

Bridge Deck Cross Section

Note for Abut. Piling from Abutment Notes.
Revised 05-2026: In "Drain Details", corrected typo of deck drain radius to R=1'-0" (Typo Was R=2'-0"). In "Half Section Near Pier" details changed Coil Rod to Field Bent (was labeled Bent).
Revised 06-2026: Added horizontal Beam Spacing dimension on cross section details. Was inadvertently changed when dimension style was updated.
Correction 04-14: Added Concrete Quantity Table & Referral Note to Summary Quantity Sheet. Removed Design Bearing Note for Abut. Piling from Abutment Notes.
BTIntegralBridges.dgn - 4383-BTC-5 - Issued 02-08. This Sheet Reissued 11-2023. Sheet Format Update.

FILE NO.	ENGLISH	DESIGN TEAM	40' Roadway PPCB (BTC Beams - Integral Abut.) Cross Section (Spans 30' - 115')	Standard Sheet 4383-BTC-5	COUNTY	PROJECT NUMBER	SHEET NUMBER

Table of Size of "b2" Bar

Longest Adjacent Span	BTC Beam Bar Size
30'-0"	**4
35'-0"	**4
40'-0"	**4
45-0"	**4
50'-0"	**4
55'-0"	**4
60'-0"	**6
65'-0"	**7
70'-0"	**7
75'-0"	**8
80'-0"	**9
85'-0"	**9
90'-0"	7
95'-0"	7
100'-0"	8
105'-0"	8
110'-0"	8
115'-0"	8
120'-0"	8

The midpoint of the 'b2' bar is to be placed at the ℄ of pier.
** Indicates 'b2' bar placed in top deck only.

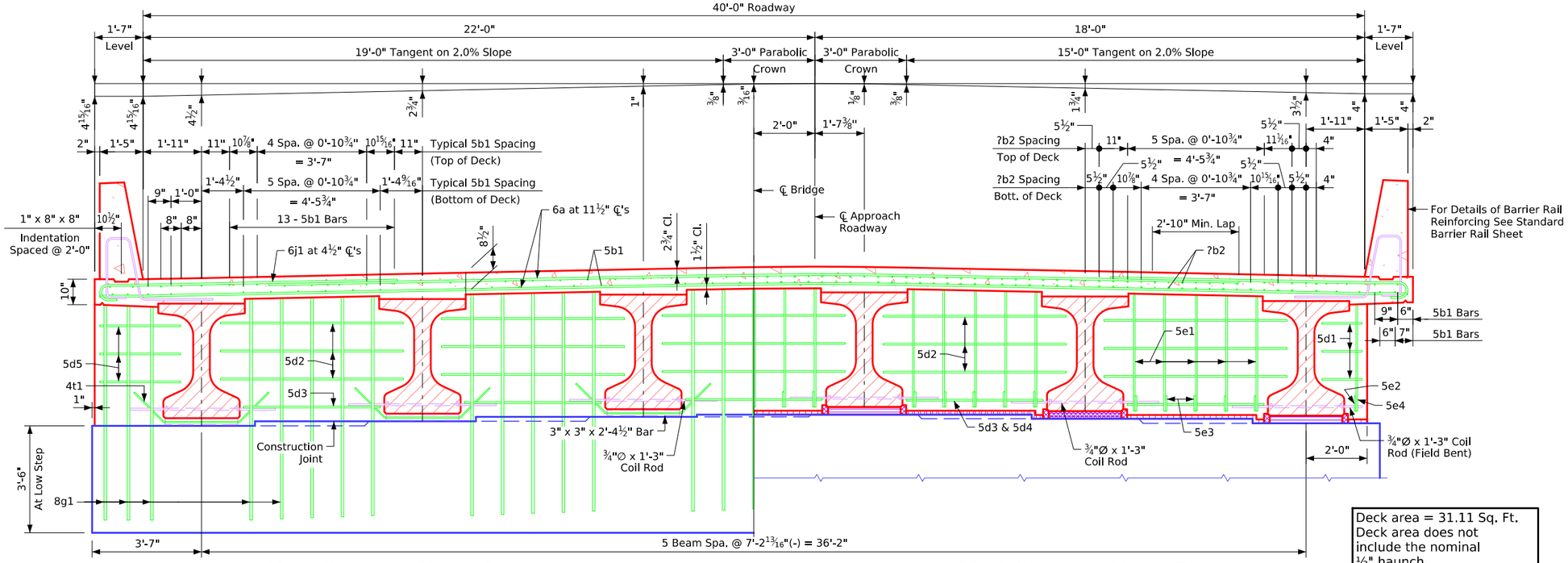

Half Section Near Abutment

Half Section Near Pier

Deck area = 31.11 Sq. Ft.
Deck area does not include the nominal ½" haunch.

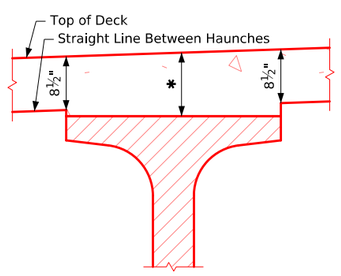

Interior Beams

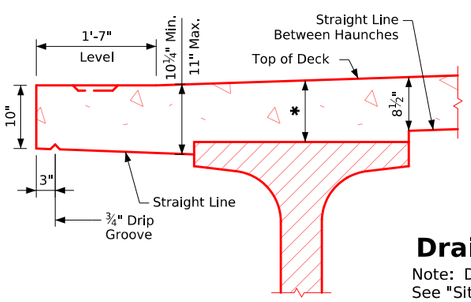

Exterior Beams

Typical Deck and Haunch Detail

* For Deck Thickness Over Beams See "Haunch And Camber Details" on Design Sheet No. ?.

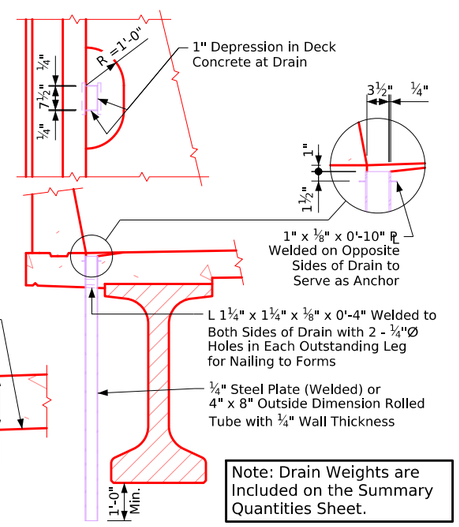

Note: Drain Weights are Included on the Summary Quantities Sheet.

Drain Details

Note: Drains are to be galvanized. ?? Drains required. See "Situation Plan" on Design Sheet No. ? for location. Weight of drains is included in the quantity for "Structural Steel". Weight is based on rolled tube.

Data for One Drain

Beam Size	BTC
Drain Weight (lbs.)	106
Drain Length (ft.)	5'-6¾"

Note: For details of Intermediate Diaphragm see Design Sheet No. ??.

Note to Designer:
6j1 spacing shown for TL-4 barrier.
See Bridge Design Manual
Section 5.2 for TL-5 6j1 spacing.

Superstructure Notes:

The bridge deck as shown includes ¾" integral wearing surface.

The pier and abutment diaphragm concrete is to be placed monolithically with the bridge deck.

Cost of all resilient joint filler material is to be included in the price bid for "Structural Concrete (Bridge)".

All beams are to be set vertical.

Forms for the deck and barrier rail are to be supported by the prestressed concrete beams.

Clear distance from face of concrete to near reinforcing bar shall be 2" unless otherwise noted or shown.

All deck and diaphragm reinforcing is to be wired in place and adequately supported before concrete is placed.

Top transverse reinforcing steel is to be parallel to and 2¾" clear below top of deck. Bottom transverse reinforcing steel is to be parallel to and 1½" clear above bottom of deck. Top and bottom reinforcing steel is to be supported by individual bar chairs spaced at not more than 3'-0" centers longitudinally and transversely, or by continuous rows of bar high chairs or deck bolsters spaced 4'-0" apart. I.M. 451.01 requirements shall apply for bar chairs, bar high chairs, and deck bolsters.

Transverse deck reinforcing may be spliced with one lap located as follows:

Top bar - lap midway between beams (min. lap = 2'-10").

Bottom bars - lap over beams (min. lap = 3'-7").

Payment for reinforcing bars shall be based on no splices, and no allowance shall be made for the additional length of bar required for the use of splices.

Cost for bearing material is to be included in the price bid for "Pretensioned Prestressed Concrete Beams".

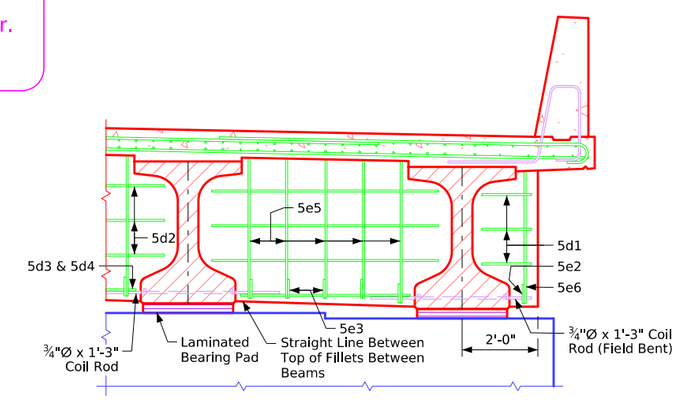

Half Section Near Pier

(Expansion Pier Shown)

Bridge Deck Cross Section

Correction 04-14: Added Concrete Quantity Table & Referral Note to Summary Quantity Sheet. Removed Design Bearing Note for Abut. Piling from Abutment Notes.
Revised 05-2026: In "Drain Details", corrected typo of deck drain radius to R=1'-0" (Typo Was R=2'-0"). In "Half Section Near Pier" details changed Coil Rod to Field Bent (was labeled Bent).
Revised 06-2026: Added horizontal Beam Spacing dimension on cross section details. Was inadvertently changed when dimension style was updated.
BTIntegralBridges.dgn - 4383-BTC-6 - Issued 02-08. This Sheet Re-Issued 11-2023. Sheet Format Update.

Table of Size of "b2" Bar

Longest Adjacent Span	BTD Beam Bar Size
30'-0"	------
35'-0"	------
40-'0"	------
45-0"	------
50'-0"	**4
55'-0"	**4
60'-0"	**5
65'-0"	**6
70'-0"	**6
75'-0"	**7
80'-0"	**8
85'-0"	**8
90'-0"	**9
95'-0"	**9
100'-0"	7
105'-0"	7
110'-0"	8
115'-0"	8
120'-0"	8
125'-0"	8
130'-0"	9
135'-0"	9

The midpoint of the 'b2' bar is to be placed at the ℄ of pier.
** Indicates 'b2' bar placed in top deck only.

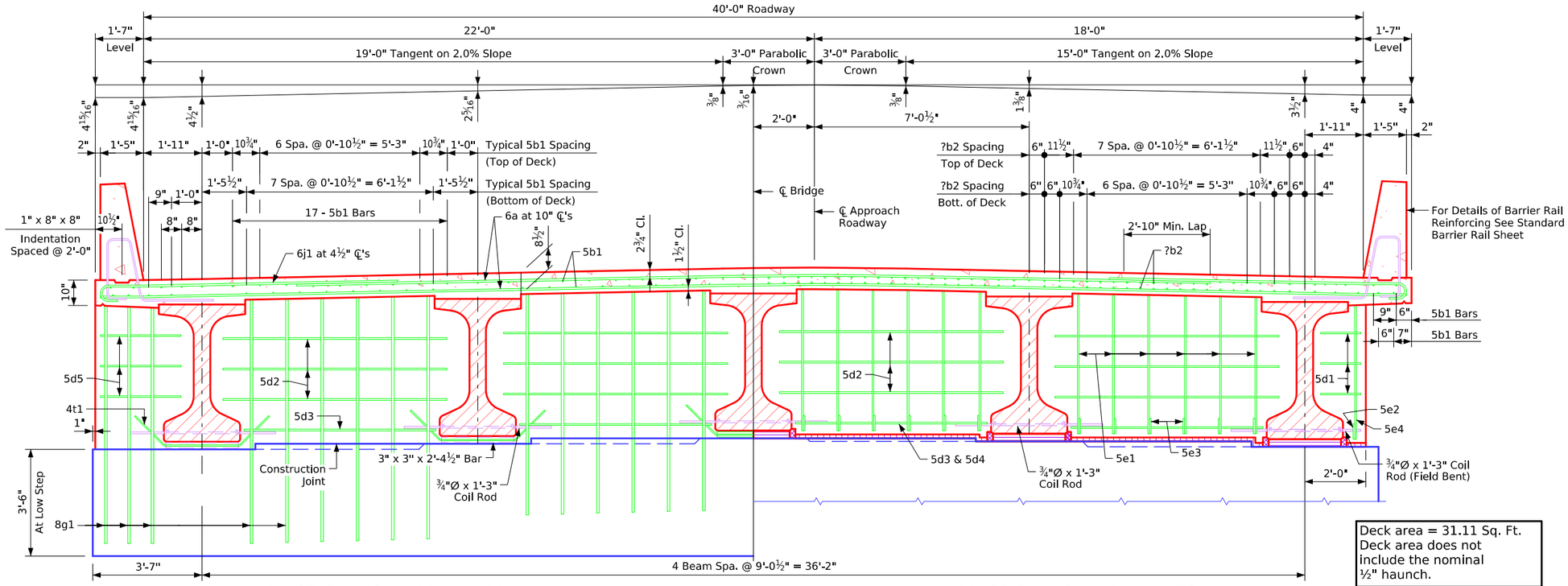

Deck area = 31.11 Sq. Ft.
Deck area does not include the nominal ½" haunch.

Half Section Near Abutment

Half Section Near Pier

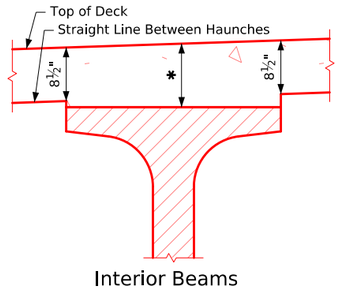

Interior Beams

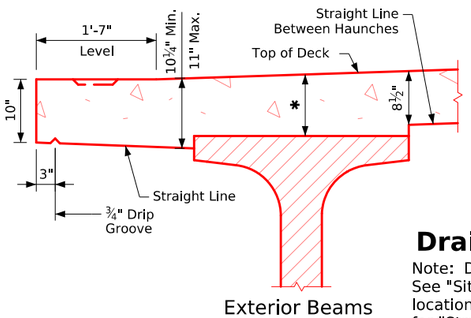

Exterior Beams

Typical Deck and Haunch Detail

* For Deck Thickness Over Beams See "Haunch And Camber Details" on Design Sheet No. ?.

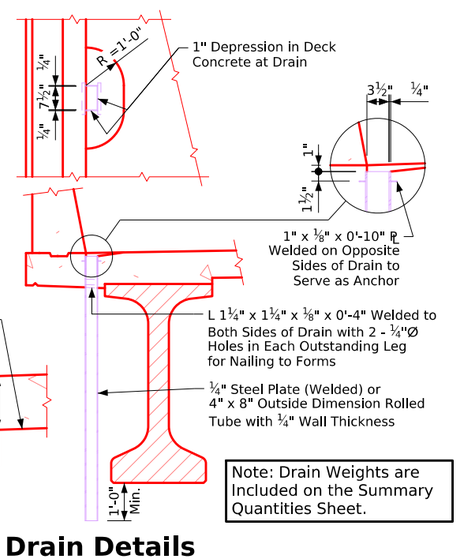

Note: Drain Weights are Included on the Summary Quantities Sheet.

Drain Details

Note: Drains are to be galvanized. ?? Drains required. See "Situation Plan" on Design Sheet No. ? for location. Weight of drains is included in the quantity for "Structural Steel". Weight is based on rolled tube.

Data for One Drain	
Beam Size	BTD
Drain Weight (lbs.)	120
Drain Length (ft.)	6'-3¾"

Note: For details of Intermediate Diaphragm see Design Sheet No. ??.

Note to Designer:
6j1 spacing shown for TL-4 barrier.
See Bridge Design Manual Section 5.2 for TL-5 6j1 spacing.

Superstructure Notes:

The bridge deck as shown includes ¾" integral wearing surface.

The pier and abutment diaphragm concrete is to be placed monolithically with the bridge deck.

Cost of all resilient joint filler material is to be included in the price bid for "Structural Concrete (Bridge)".

All beams are to be set vertical.

Forms for the deck and barrier rail are to be supported by the prestressed concrete beams.

Clear distance from face of concrete to near reinforcing bar shall be 2" unless otherwise noted or shown.

All deck and diaphragm reinforcing is to be wired in place and adequately supported before concrete is placed.

Top transverse reinforcing steel is to be parallel to and 2¾" clear below top of deck. Bottom transverse reinforcing steel is to be parallel to and 1½" clear above bottom of deck. Top and bottom reinforcing steel is to be supported by individual bar chairs spaced at not more than 3'-0" centers longitudinally and transversely, or by continuous rows of bar high chairs or deck bolsters spaced 4'-0" apart. I.M. 451.01 requirements shall apply for bar chairs, bar high chairs, and deck bolsters.

Transverse deck reinforcing may be spliced with one lap located as follows:

Top bar - lap midway between beams (min. lap = 2'-10").

Bottom bars - lap over beams (min. lap = 3'-7").

Payment for reinforcing bars shall be based on no splices, and no allowance shall be made for the additional length of bar required for the use of splices.

Cost for bearing material is to be included in the price bid for "Pretensioned Prestressed Concrete Beams".

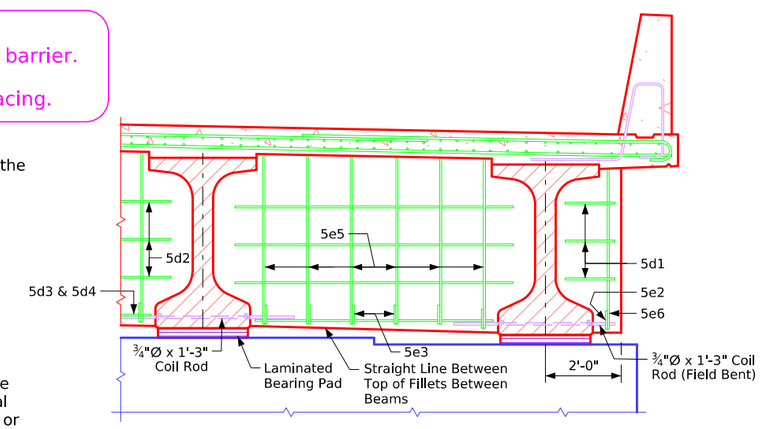

Half Section Near Pier

(Expansion Pier Shown)

Bridge Deck Cross Section

Correction 04-14: Added Concrete Quantity Table & Referral Note to Summary Quantity Sheet. Removed Design Bearing Note for Abut. Piling from Abutment Notes.
Revised 05-2026: In "Drain Details", corrected typo of deck drain radius to R=1'-0" (Typo Was R=2'-0"). In "Half Section Near Pier" details changed Coil Rod to Field Bent (was labeled Bent).
Revised 06-2026: Added horizontal Beam Spacing dimension on cross section details. Was inadvertently changed when dimension style was updated.
BTIntegralBridges.dgn - 4383-BTD-5 - Issued 02-08. This Sheet Re-Issued 11-2023. Sheet Format Update.

Table of Size of "b2" Bar

Longest Adjacent Span	BTE Beam Bar Size
30'-0"	------
35'-0"	------
40'-0"	------
45-0"	------
50'-0"	------
55'-0"	------
60'-0"	**4
65'-0"	**5
70'-0"	**6
75'-0"	**6
80'-0"	**7
85'-0"	**7
90'-0"	**8
95'-0"	**8
100'-0"	**9
105'-0"	**9
110'-0"	7
115'-0"	7
120'-0"	7
125'-0"	8
130'-0"	8
135'-0"	8
140'-0"	9
145'-0"	9
150'-0"	9
155'-0"	9

The midpoint of the 'b2' bar is to be placed at the ℄ of pier.
** Indicates 'b2' bar placed in top deck only.

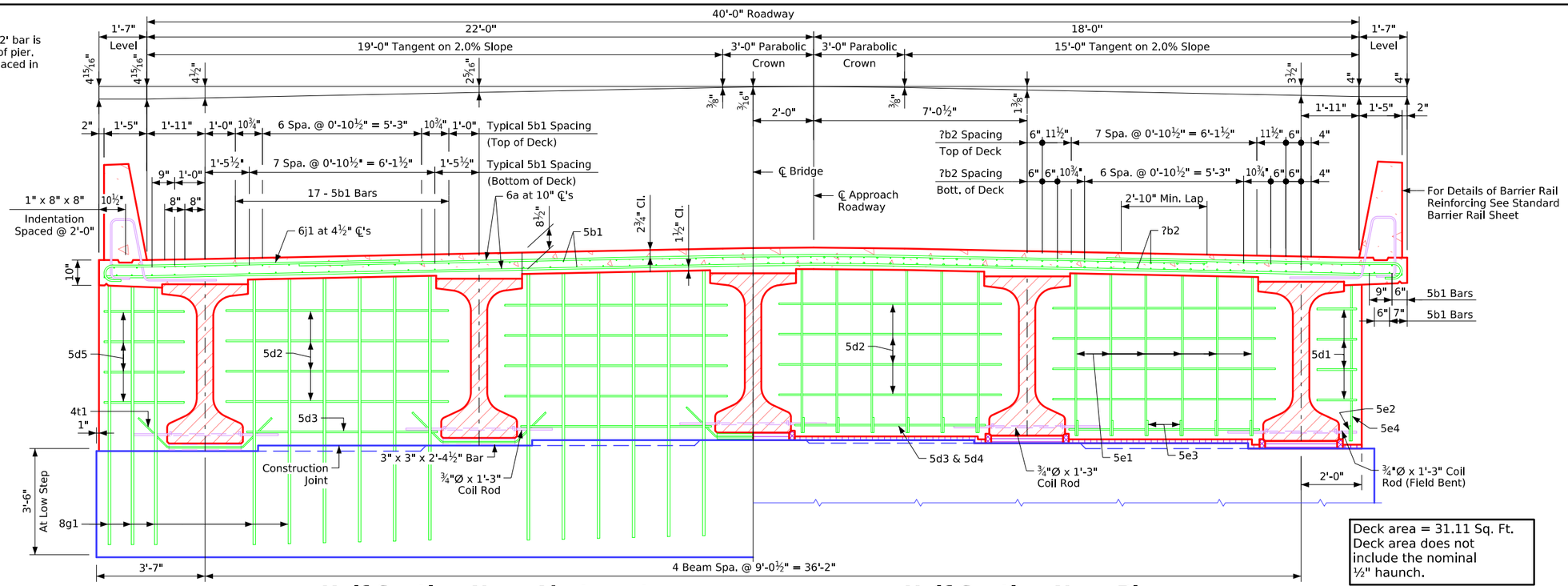

Half Section Near Abutment **Half Section Near Pier**

Deck area = 31.11 Sq. Ft.
Deck area does not include the nominal ½" haunch.

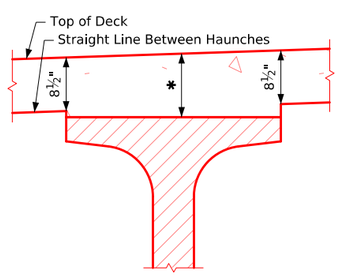

Interior Beams

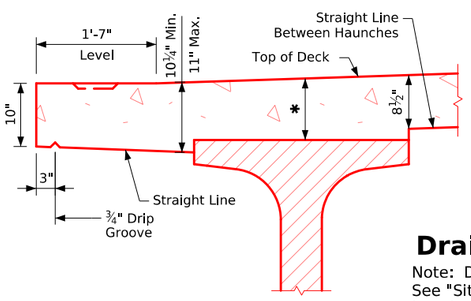

Exterior Beams

Typical Deck and Haunch Detail

* For Deck Thickness Over Beams See "Haunch And Camber Details" on Design Sheet No. ?.

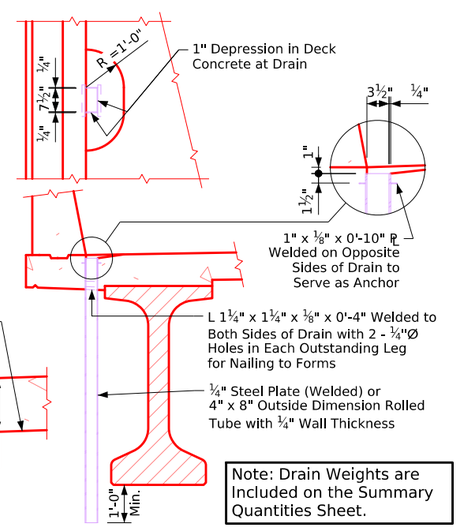

Note: Drain Weights are Included on the Summary Quantities Sheet.

Drain Details

Note: Drains are to be galvanized. ?? Drains required. See "Situation Plan" on Design Sheet No. ? for location. Weight of drains is included in the quantity for "Structural Steel". Weight is based on rolled tube.

Data for One Drain	
Beam Size	BTE
Drain Weight (lbs.)	136
Drain Length (ft.)	7'-0¾"

Note: For details of Intermediate Diaphragm see Design Sheet No. ??.

Note to Designer:
6j1 spacing shown for TL-4 barrier.
See Bridge Design Manual Section 5.2 for TL-5 6j1 spacing.

Superstructure Notes:

The bridge deck as shown includes ¾" integral wearing surface.

The pier and abutment diaphragm concrete is to be placed monolithically with the bridge deck.

Cost of all resilient joint filler material is to be included in the price bid for "Structural Concrete (Bridge)".

All beams are to be set vertical.

Forms for the deck and barrier rail are to be supported by the prestressed concrete beams.

Clear distance from face of concrete to near reinforcing bar shall be 2" unless otherwise noted or shown.

All deck and diaphragm reinforcing is to be wired in place and adequately supported before concrete is placed.

Top transverse reinforcing steel is to be parallel to and 2¾" clear below top of deck. Bottom transverse reinforcing steel is to be parallel to and 1½" clear above bottom of deck. Top and bottom reinforcing steel is to be supported by individual bar chairs spaced at not more than 3'-0" centers longitudinally and transversely, or by continuous rows of bar high chairs or deck bolsters spaced 4'-0" apart. I.M. 451.01 requirements shall apply for bar chairs, bar high chairs, and deck bolsters.

Transverse deck reinforcing may be spliced with one lap located as follows:

Top bar - lap midway between beams (min. lap = 2'-10").

Bottom bars - lap over beams (min. lap = 3'-7").

Payment for reinforcing bars shall be based on no splices, and no allowance shall be made for the additional length of bar required for the use of splices.

Cost for bearing material is to be included in the price bid for "Pretensioned Prestressed Concrete Beams".

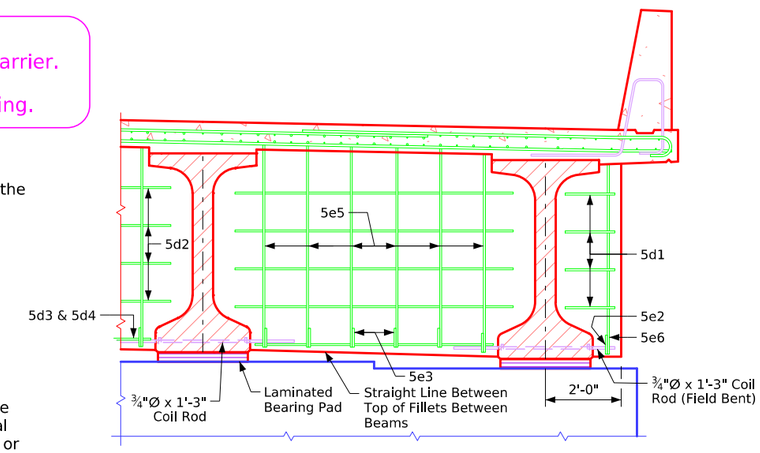

Half Section Near Pier
(Expansion Pier Shown)

Bridge Deck Cross Section

Correction 04-14: Added Concrete Quantity Table & Referral Note to Summary Quantity Sheet. Removed Design Bearing Note for Abut. Piling from Abutment Notes.
Revised 05-2026: In "Drain Details", corrected typo of deck drain radius to R=1'-0" (Typo Was R=2'-0"). In "Half Section Near Pier" details changed Coil Rod to Field Bent (was labeled Bent).
Revised 06-2026: Added horizontal Beam Spacing dimension on cross section details. Was inadvertently changed when dimension style was updated.
BTIntegralBridges.dgn - 4383-BTE-5 - Issued 02-08. This Sheet Re-Issued 11-2023. Sheet Format Update.

Table of Size of "b2" Bar

Longest Adjacent Span	BTE Beam Bar Size
30'-0"	------
35'-0"	------
40'-0"	------
45-0"	------
50'-0"	------
55'-0"	------
60'-0"	**4
65'-0"	**5
70'-0"	**6
75'-0"	**6
80'-0"	**7
85'-0"	**7
90'-0"	**8
95'-0"	**8
100'-0"	**9
105'-0"	**9
110'-0"	7
115'-0"	7
120'-0"	7
125'-0"	8
130'-0"	8
135'-0"	8
140'-0"	9
145'-0"	9
150'-0"	9
155'-0"	9

The midpoint of the 'b2' bar is to be placed at the ℄ of pier.
** Indicates 'b2' bar placed in top deck only.

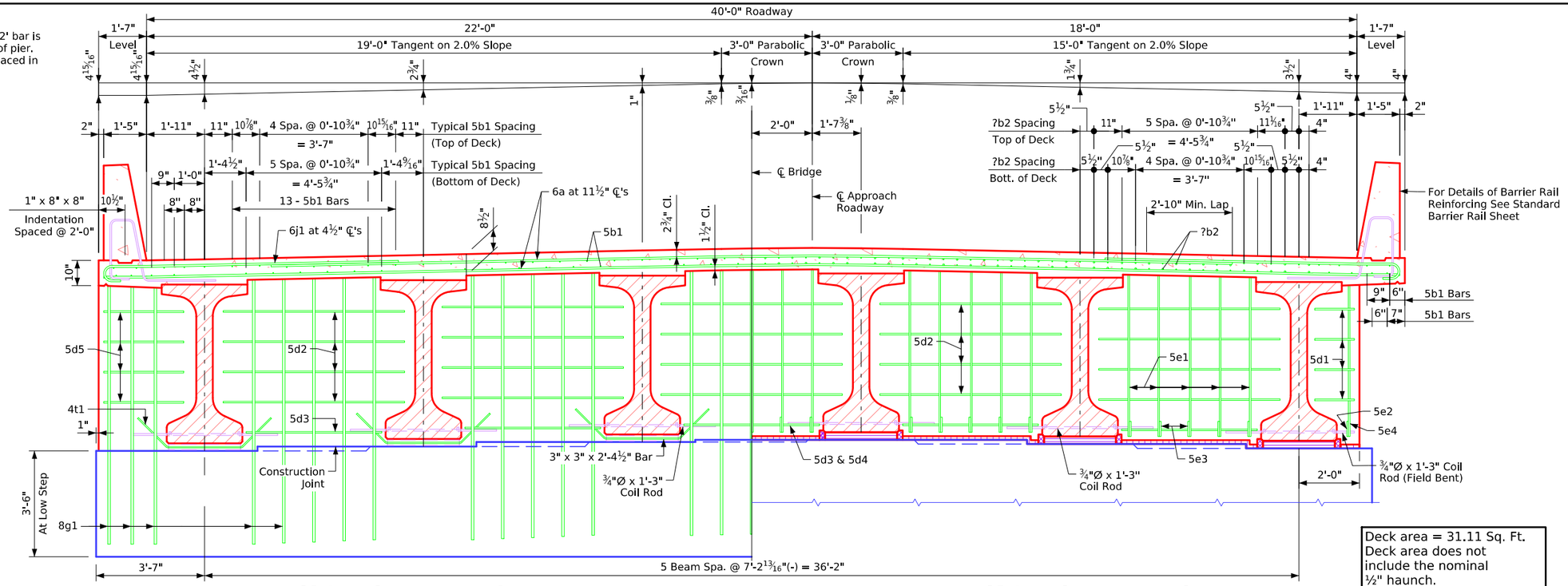

Deck area = 31.11 Sq. Ft.
Deck area does not include the nominal ½" haunch.

Half Section Near Abutment

Half Section Near Pier

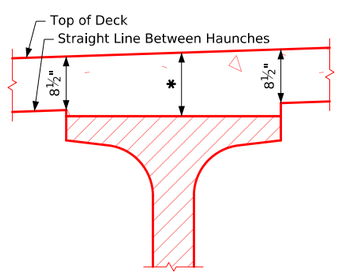

Interior Beams

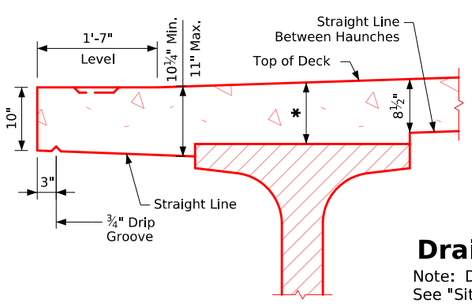

Exterior Beams

Typical Deck and Haunch Detail

* For Deck Thickness Over Beams See "Haunch And Camber Details" on Design Sheet No. ?.

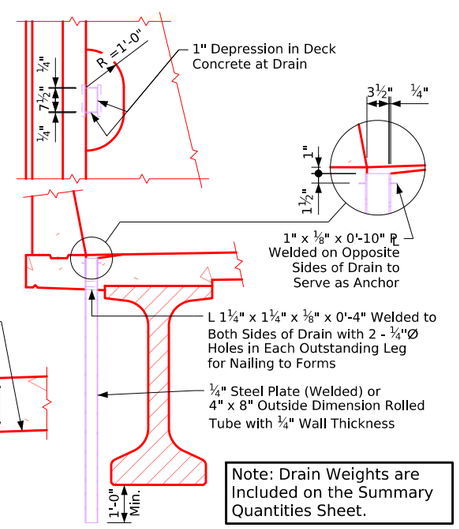

Note: Drain Weights are Included on the Summary Quantities Sheet.

Drain Details

Note: Drains are to be galvanized. ?? Drains required. See "Situation Plan" on Design Sheet No. ? for location. Weight of drains is included in the quantity for "Structural Steel". Weight is based on rolled tube.

Data for One Drain

Beam Size	BTE
Drain Weight (lbs.)	136
Drain Length (ft.)	7'-0¾"

Note: For details of Intermediate Diaphragm see Design Sheet No. ??.

Note to Designer:
6j1 spacing shown for TL-4 barrier.
See Bridge Design Manual
Section 5.2 for TL-5 6j1 spacing.

Superstructure Notes:

The bridge deck as shown includes ¾" integral wearing surface.

The pier and abutment diaphragm concrete is to be placed monolithically with the bridge deck.

Cost of all resilient joint filler material is to be included in the price bid for "Structural Concrete (Bridge)".

All beams are to be set vertical.

Forms for the deck and barrier rail are to be supported by the prestressed concrete beams.

Clear distance from face of concrete to near reinforcing bar shall be 2" unless otherwise noted or shown.

All deck and diaphragm reinforcing is to be wired in place and adequately supported before concrete is placed.

Top transverse reinforcing steel is to be parallel to and 2¾" clear below top of deck. Bottom transverse reinforcing steel is to be parallel to and 1½" clear above bottom of deck. Top and bottom reinforcing steel is to be supported by individual bar chairs spaced at not more than 3'-0" centers longitudinally and transversely, or by continuous rows of bar high chairs or deck bolsters spaced 4'-0" apart. I.M. 451.01 requirements shall apply for bar chairs, bar high chairs, and deck bolsters.

Transverse deck reinforcing may be spliced with one lap located as follows:

Top bar - lap midway between beams (min. lap = 2'-10").

Bottom bars - lap over beams (min. lap = 3'-7").

Payment for reinforcing bars shall be based on no splices, and no allowance shall be made for the additional length of bar required for the use of splices.

Cost for bearing material is to be included in the price bid for "Pretensioned Prestressed Concrete Beams".

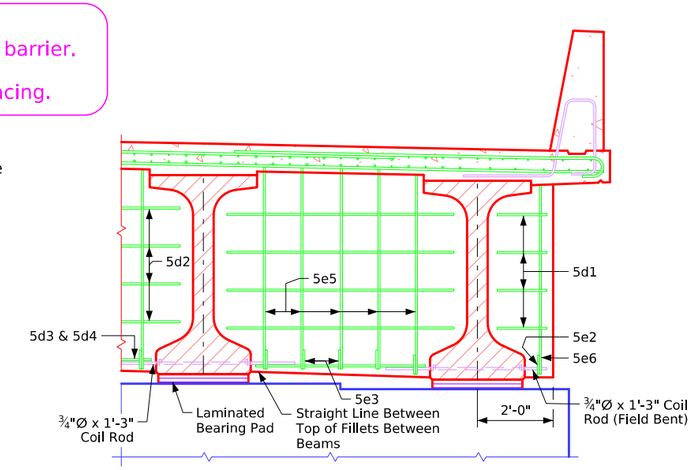

Half Section Near Pier

(Expansion Pier Shown)

Bridge Deck Cross Section

Correction 04-14: Added Concrete Quantity Table & Referral Note to Summary Quantity Sheet. Removed Design Bearing Note for Abut. Piling from Abutment Notes.
Revised 05-2026: In "Drain Details", corrected typo of deck drain radius to R=1'-0" (Typo Was R=2'-0"). In "Half Section Near Pier" details changed Coil Rod to Field Bent (was labeled Bent).
Revised 06-2026: Added horizontal Beam Spacing dimension on cross section details. Was inadvertently changed when dimension style was updated.
BTIntegralBridges.dgn - 4380-BTE-6 - Issued 02-08. This Sheet Re-Issued 11-2023. Sheet Format Update.

Table of Size of "b2" Bar

Longest Adjacent Span	BTB Beam Bar Size
30'-0"	**4
35'-0"	**4
40'-0"	**4
45-0"	**5
50'-0"	**6
55'-0"	**6
60'-0"	**6
65'-0"	**7
70'-0"	**8
75'-0"	**8
80'-0"	**9
85'-0"	7
90'-0"	8
95'-0"	8
100'-0"	8
105'-0"	9

The midpoint of the 'b2' bar is to be placed at the ℄ of pier.
** Indicates 'b2' bar placed in top deck only.

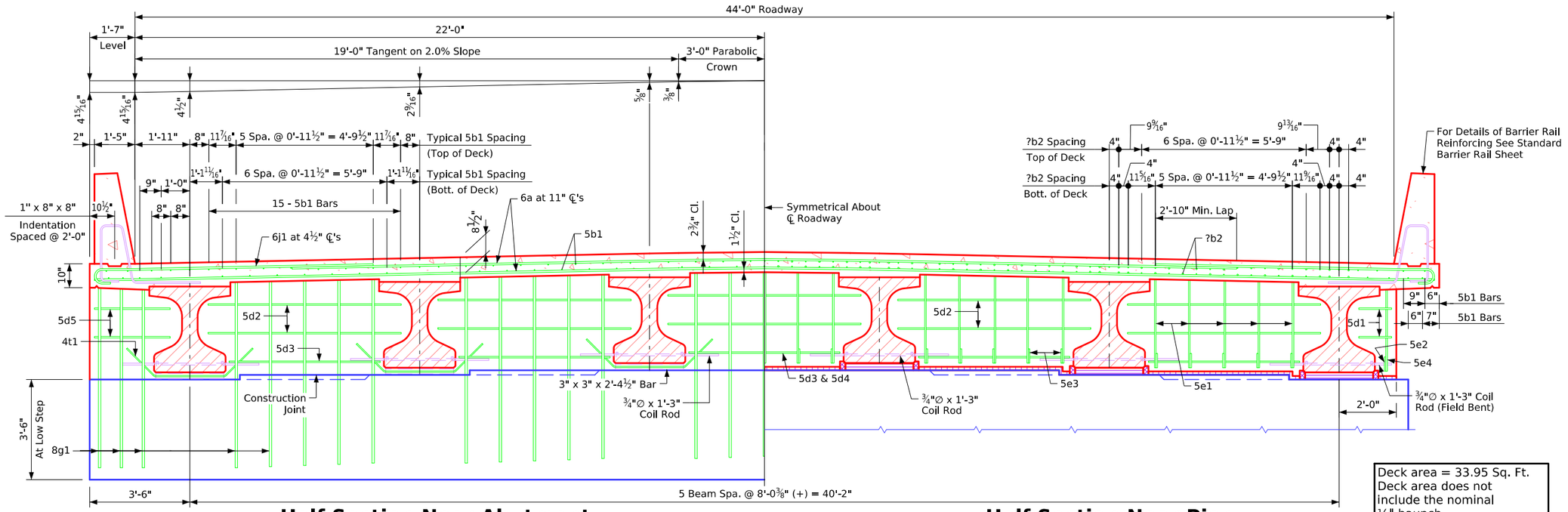

Half Section Near Abutment

Half Section Near Pier

Deck area = 33.95 Sq. Ft.
Deck area does not include the nominal ½" haunch.

Note: For details of Intermediate Diaphragm see Design Sheet No. ??.

Note to Designer:
6j1 spacing shown for TL-4 barrier. See Bridge Design Manual Section 5.2 for TL-5 6j1 spacing.

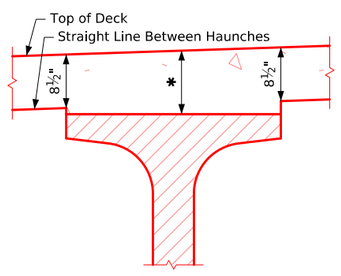

Interior Beams

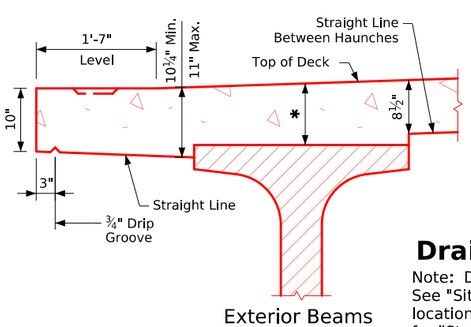

Exterior Beams

Typical Deck and Haunch Detail

* For Deck Thickness Over Beams See "Haunch And Camber Details" on Design Sheet No. ?.

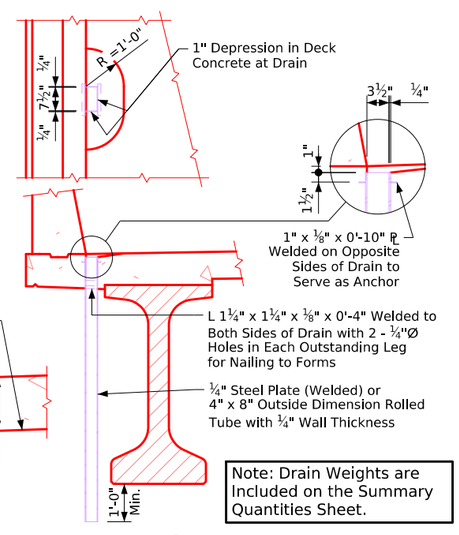

Note: Drain Weights are Included on the Summary Quantities Sheet.

Drain Details

Note: Drains are to be galvanized. ?? Drains required. See "Situation Plan" on Design Sheet No. ? for location. Weight of drains is included in the quantity for "Structural Steel". Weight is based on rolled tube.

Data for One Drain

Beam Size	BTB
Drain Weight (lbs.)	92
Drain Length (ft.)	4'-9¾"

Superstructure Notes:

The bridge deck as shown includes ¾" integral wearing surface.

The pier and abutment diaphragm concrete is to be placed monolithically with the bridge deck.

Cost of all resilient joint filler material is to be included in the price bid for "Structural Concrete (Bridge)".

All beams are to be set vertical.

Forms for the deck and barrier rail are to be supported by the prestressed concrete beams.

Clear distance from face of concrete to near reinforcing bar shall be 2" unless otherwise noted or shown.

All deck and diaphragm reinforcing is to be wired in place and adequately supported before concrete is placed.

Top transverse reinforcing steel is to be parallel to and 2¾" clear below top of deck. Bottom transverse reinforcing steel is to be parallel to and 1½" clear above bottom of deck. Top and bottom reinforcing steel is to be supported by individual bar chairs spaced at not more than 3'-0" centers longitudinally and transversely, or by continuous rows of bar high chairs or deck bolsters spaced 4'-0" apart. I.M. 451.01 requirements shall apply for bar chairs, bar high chairs, and deck bolsters.

Transverse deck reinforcing may be spliced with one lap located as follows:

Top bar - lap midway between beams (min. lap = 2'-10").

Bottom bars - lap over beams (min. lap = 3'-7").

Payment for reinforcing bars shall be based on no splices, and no allowance shall be made for the additional length of bar required for the use of splices.

Cost for bearing material is to be included in the price bid for "Pretensioned Prestressed Concrete Beams".

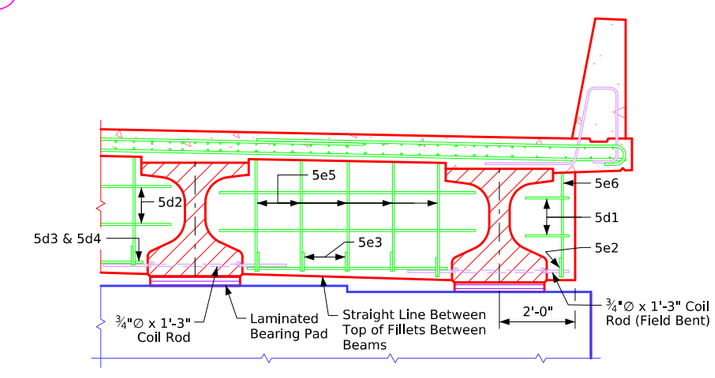

Half Section Near Pier
(Expansion Pier Shown)

Bridge Deck Cross Section

Correction 04-14: Added Concrete Quantity Table & Referral Note to Summary Quantity Sheet. Removed Design Bearing Note for Abut. Piling from Abutment Notes.
Revised 05-2026: In "Drain Details", corrected typo of deck drain radius to R=1'-0" (Typo Was R=2'-0"). In "Half Section Near Pier" details changed Coil Rod to Field Bent (was labeled Bent).
BTIntegralBridges.dgn - 4384-BTB-6 - Issued 02-08. This Sheet Re-Issued 11-2023. Sheet Format Update.

Table of Size of "b2" Bar

Longest Adjacent Span	BTB Beam Bar Size
30'-0"	**4
35'-0"	**4
40-'0"	**4
45-0"	**5
50'-0"	**6
55'-0"	**6
60'-0"	**6
65'-0"	**7
70'-0"	**8
75'-0"	**8
80'-0"	**9
85'-0"	7
90'-0"	8
95'-0"	8
100'-0"	8
105'-0"	9

The midpoint of the 'b2' bar is to be placed at the ℄ of pier.
** Indicates 'b2' bar placed in top deck only.

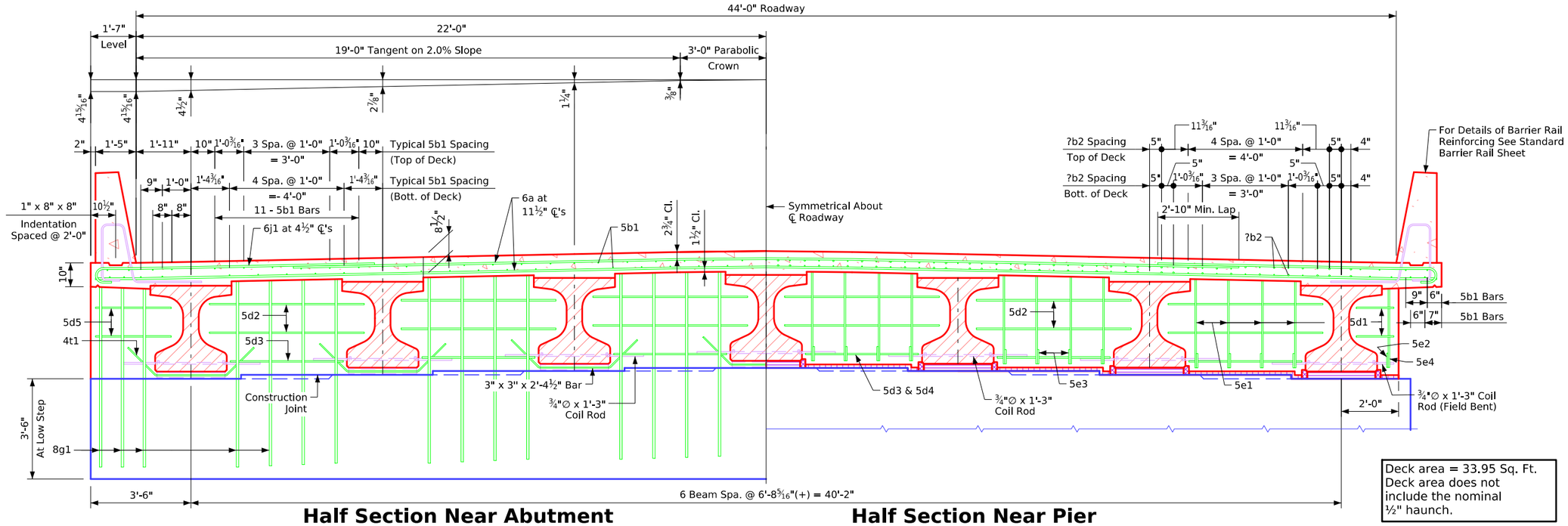

Half Section Near Abutment **Half Section Near Pier**

Deck area = 33.95 Sq. Ft.
Deck area does not include the nominal ½" haunch.

Note: For details of Intermediate Diaphragm see Design Sheet No. ??.

Note to Designer:
6j1 spacing shown for TL-4 barrier.
See Bridge Design Manual
Section 5.2 for TL-5 6j1 spacing.

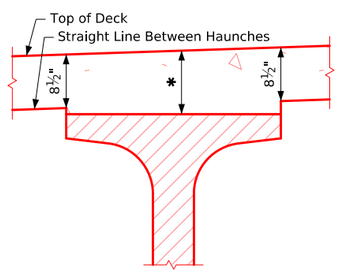

Interior Beams

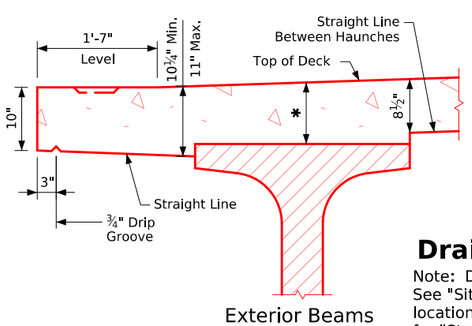

Exterior Beams

Typical Deck and Haunch Detail

* For Deck Thickness Over Beams See "Haunch And Camber Details" on Design Sheet No. ?.

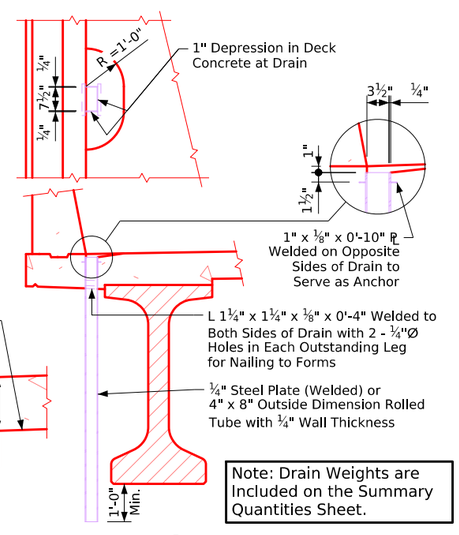

Note: Drain Weights are Included on the Summary Quantities Sheet.

Drain Details

Note: Drains are to be galvanized. ?? Drains required. See "Situation Plan" on Design Sheet No. ? for location. Weight of drains is included in the quantity for "Structural Steel". Weight is based on rolled tube.

Data for One Drain

Beam Size	BTB
Drain Weight (lbs.)	92
Drain Length (ft.)	4'-9 3/4"

Superstructure Notes:

The bridge deck as shown includes 3/4" integral wearing surface.

The pier and abutment diaphragm concrete is to be placed monolithically with the bridge deck.

Cost of all resilient joint filler material is to be included in the price bid for "Structural Concrete (Bridge)".

All beams are to be set vertical.

Forms for the deck and barrier rail are to be supported by the prestressed concrete beams.

Clear distance from face of concrete to near reinforcing bar shall be 2" unless otherwise noted or shown.

All deck and diaphragm reinforcing is to be wired in place and adequately supported before concrete is placed.

Top transverse reinforcing steel is to be parallel to and 2 3/4" clear below top of deck. Bottom transverse reinforcing steel is to be parallel to and 1 1/2" clear above bottom of deck. Top and bottom reinforcing steel is to be supported by individual bar chairs spaced at not more than 3'-0" centers longitudinally and transversely, or by continuous rows of bar high chairs or deck bolsters spaced 4'-0" apart. I.M. 451.01 requirements shall apply for bar chairs, bar high chairs, and deck bolsters.

Transverse deck reinforcing may be spliced with one lap located as follows:

Top bar - lap midway between beams (min. lap = 2'-10").

Bottom bars - lap over beams (min. lap = 3'-7").

Payment for reinforcing bars shall be based on no splices, and no allowance shall be made for the additional length of bar required for the use of splices.

Cost for bearing material is to be included in the price bid for "Pretensioned Prestressed Concrete Beams".

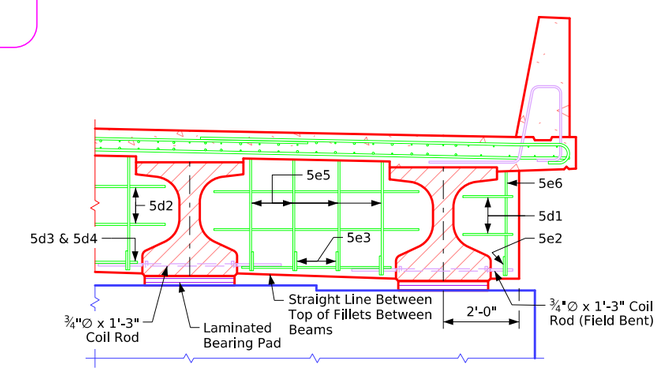

Half Section Near Pier
(Expansion Pier Shown)

Bridge Deck Cross Section

Correction 04-14: Added Concrete Quantity Table & Referral Note to Summary Quantity Sheet. Removed Design Bearing Note for Abut. Piling from Abutment Notes.
Revised 05-2026: In "Drain Details", corrected typo of deck drain radius to R=1'-0" (Typo Was R=2'-0"). In "Half Section Near Pier" details changed Coil Rod to Field Bent (was labeled Bent).
Revised 06-2026: Added horizontal Beam Spacing dimension on cross section details. Was inadvertently changed when dimension style was updated.
BTIntegralBridges.dgn - 4384-BTB-7 - Issued 02-08. This Sheet Re-Issued 11-2023. Sheet Format Update.

Table of Size of "b2" Bar

Longest Adjacent Span	BTC Beam Bar Size
30'-0"	**4
35'-0"	**4
40-'0"	**4
45-0"	**4
50'-0"	**4
55'-0"	**4
60'-0"	**6
65'-0"	**7
70'-0"	**7
75'-0"	**8
80'-0"	**9
85'-0"	**9
90'-0"	7
95'-0"	7
100'-0"	8
105'-0"	8
110'-0"	8
115'-0"	8
120'-0"	8

The midpoint of the 'b2' bar is to be placed at the ℄ of pier.
** Indicates 'b2' bar placed in top deck only.

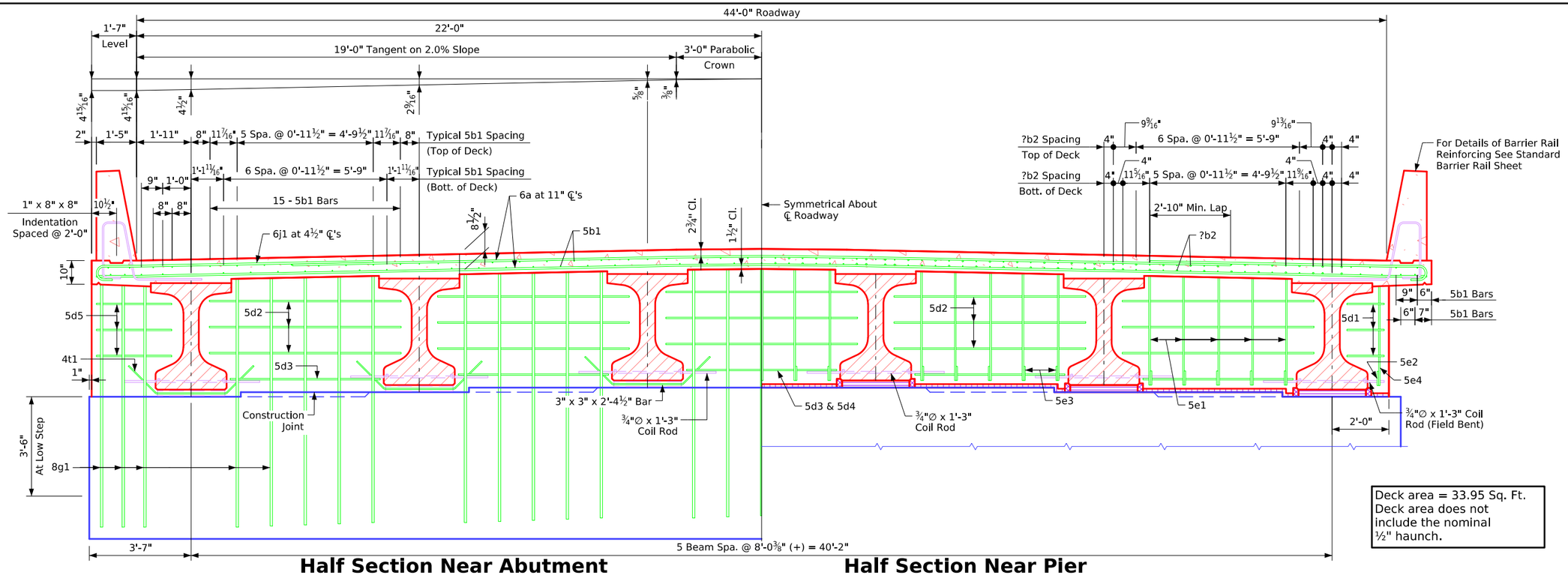

Deck area = 33.95 Sq. Ft.
Deck area does not include the nominal ½" haunch.

Half Section Near Abutment

Half Section Near Pier

Note: For details of Intermediate Diaphragm see Design Sheet No. ??.

Note to Designer:
6j1 spacing shown for TL-4 barrier.
See Bridge Design Manual Section 5.2 for TL-5 6j1 spacing.

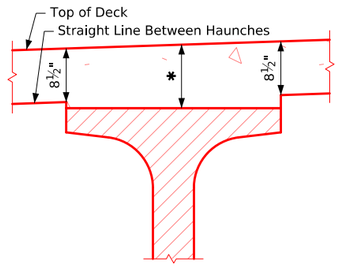

Interior Beams

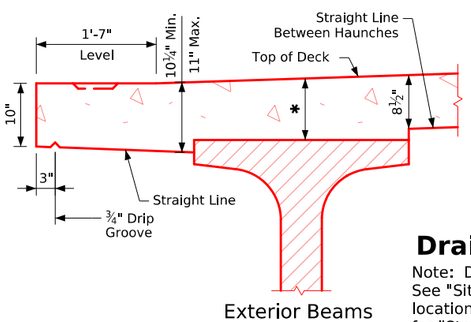

Exterior Beams

Typical Deck and Haunch Detail

* For Deck Thickness Over Beams See "Haunch And Camber Details" on Design Sheet No. ?.

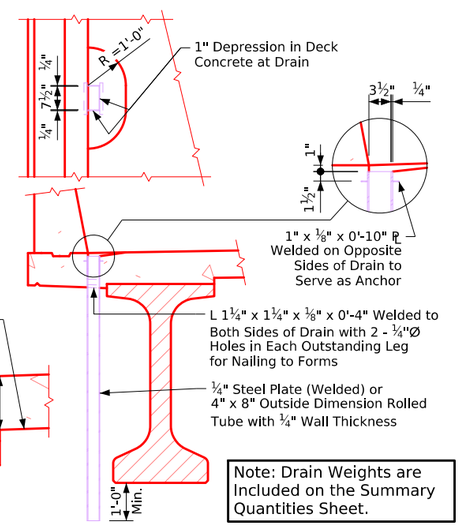

Note: Drain Weights are Included on the Summary Quantities Sheet.

Drain Details

Note: Drains are to be galvanized. ?? Drains required. See "Situation Plan" on Design Sheet No. ? for location. Weight of drains is included in the quantity for "Structural Steel". Weight is based on rolled tube.

Data for One Drain	
Beam Size	BTC
Drain Weight (lbs.)	106
Drain Length (ft.)	5'-6¾"

Superstructure Notes:

The bridge deck as shown includes ¾" integral wearing surface.

The pier and abutment diaphragm concrete is to be placed monolithically with the bridge deck.

Cost of all resilient joint filler material is to be included in the price bid for "Structural Concrete (Bridge)".

All beams are to be set vertical.

Forms for the deck and barrier rail are to be supported by the prestressed concrete beams.

Clear distance from face of concrete to near reinforcing bar shall be 2" unless otherwise noted or shown.

All deck and diaphragm reinforcing is to be wired in place and adequately supported before concrete is placed.

Top transverse reinforcing steel is to be parallel to and 2¾" clear below top of deck. Bottom transverse reinforcing steel is to be parallel to and 1½" clear above bottom of deck. Top and bottom reinforcing steel is to be supported by individual bar chairs spaced at not more than 3'-0" centers longitudinally and transversely, or by continuous rows of bar high chairs or deck bolsters spaced 4'-0" apart. I.M. 451.01 requirements shall apply for bar chairs, bar high chairs, and deck bolsters.

Transverse deck reinforcing may be spliced with one lap located as follows:

Top bar - lap midway between beams (min. lap = 2'-10").

Bottom bars - lap over beams (min. lap = 3'-7").

Payment for reinforcing bars shall be based on no splices, and no allowance shall be made for the additional length of bar required for the use of splices.

Cost for bearing material is to be included in the price bid for "Pretensioned Prestressed Concrete Beams".

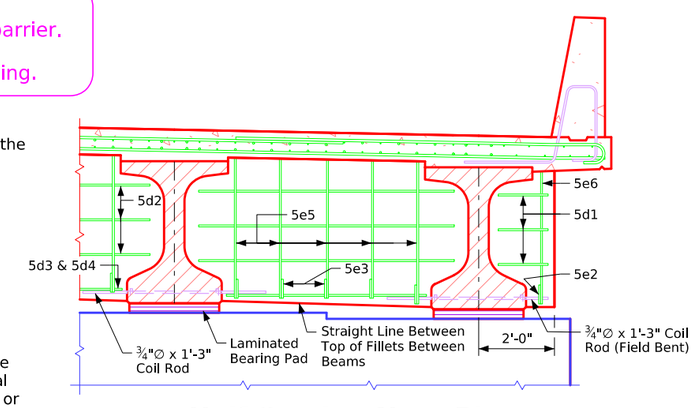

Half Section Near Pier

(Expansion Pier Shown)

Bridge Deck Cross Section

Correction 04-14: Added Concrete Quantity Table & Referral Note to Summary Quantity Sheet. Removed Design Bearing Note for Abut. Piling from Abutment Notes.
Revised 05-2026: In "Drain Details", corrected typo of deck drain radius to R=1'-0" (Typo Was R=2'-0"). In "Half Section Near Pier" details changed Coil Rod to Field Bent (was labeled Bent).
Revised 06-2026: Added horizontal Beam Spacing dimension on cross section details. Was inadvertently changed when dimension style was updated.
BTIntegralBridges.dgn - 4384-BTC-6 - Issued 02-08. This Sheet Re-Issued 11-2023. Sheet Format Update.

Table of Size of "b2" Bar

Longest Adjacent Span	BTD Beam Bar Size
30'-0"	------
35'-0"	------
40-'0"	------
45-0"	------
50'-0"	**4
55'-0"	**4
60'-0"	**5
65'-0"	**6
70'-0"	**6
75'-0"	**7
80'-0"	**8
85'-0"	**8
90'-0"	**9
95'-0"	**9
100'-0"	7
105'-0"	7
110'-0"	8
115'-0"	8
120'-0"	8
125'-0"	8
130'-0"	9
135'-0"	9

The midpoint of the 'b2' bar is to be placed at the ℄ of pier.
** Indicates 'b2' bar placed in top deck only.

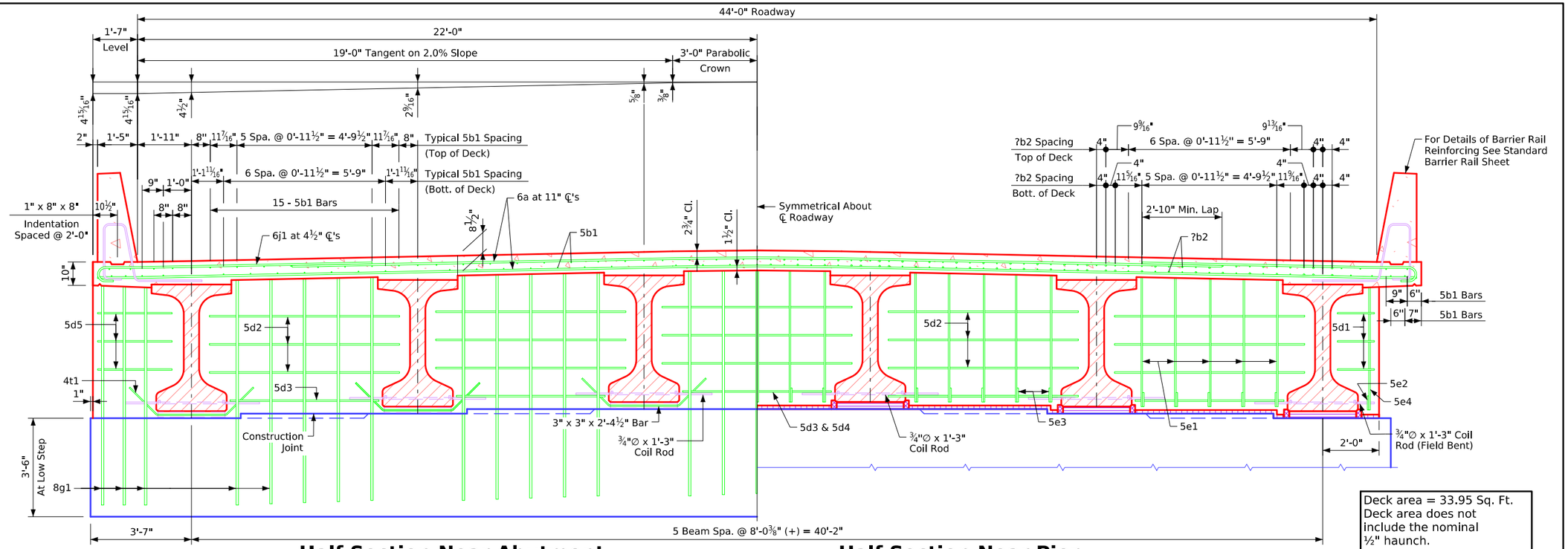

Deck area = 33.95 Sq. Ft.
Deck area does not include the nominal ½" haunch.

Half Section Near Abutment

Half Section Near Pier

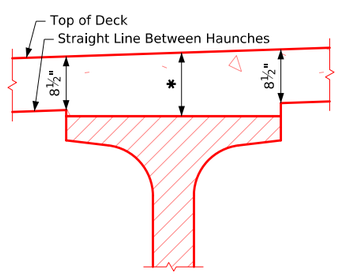

Interior Beams

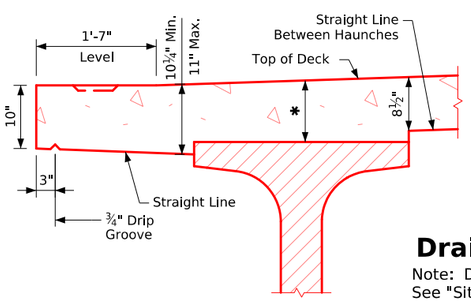

Exterior Beams

Typical Deck and Haunch Detail

* For Deck Thickness Over Beams See "Haunch And Camber Details" on Design Sheet No. ?.

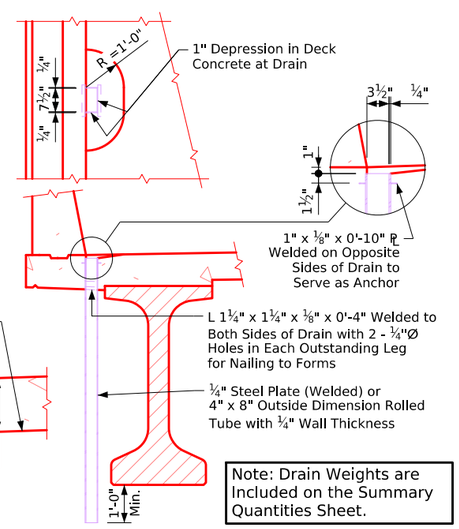

Note: Drain Weights are Included on the Summary Quantities Sheet.

Drain Details

Note: Drains are to be galvanized. ?? Drains required. See "Situation Plan" on Design Sheet No. ? for location. Weight of drains is included in the quantity for "Structural Steel". Weight is based on rolled tube.

Data for One Drain	
Beam Size	BTD
Drain Weight (lbs.)	120
Drain Length (ft.)	6'-3¾"

Note: For details of Intermediate Diaphragm see Design Sheet No. ??.

Note to Designer:
6j1 spacing shown for TL-4 barrier.
See Bridge Design Manual Section 5.2 for TL-5 6j1 spacing.

Superstructure Notes:

The bridge deck as shown includes ¾" integral wearing surface.

The pier and abutment diaphragm concrete is to be placed monolithically with the bridge deck.

Cost of all resilient joint filler material is to be included in the price bid for "Structural Concrete (Bridge)".

All beams are to be set vertical.

Forms for the deck and barrier rail are to be supported by the prestressed concrete beams.

Clear distance from face of concrete to near reinforcing bar shall be 2" unless otherwise noted or shown.

All deck and diaphragm reinforcing is to be wired in place and adequately supported before concrete is placed.

Top transverse reinforcing steel is to be parallel to and 2¾" clear below top of deck. Bottom transverse reinforcing steel is to be parallel to and 1½" clear above bottom of deck. Top and bottom reinforcing steel is to be supported by individual bar chairs spaced at not more than 3'-0" centers longitudinally and transversely, or by continuous rows of bar high chairs or deck bolsters spaced 4'-0" apart. I.M. 451.01 requirements shall apply for bar chairs, bar high chairs, and deck bolsters.

Transverse deck reinforcing may be spliced with one lap located as follows:

Top bar - lap midway between beams (min. lap = 2'-10").

Bottom bars - lap over beams (min. lap = 3'-7").

Payment for reinforcing bars shall be based on no splices, and no allowance shall be made for the additional length of bar required for the use of splices.

Cost for bearing material is to be included in the price bid for "Pretensioned Prestressed Concrete Beams".

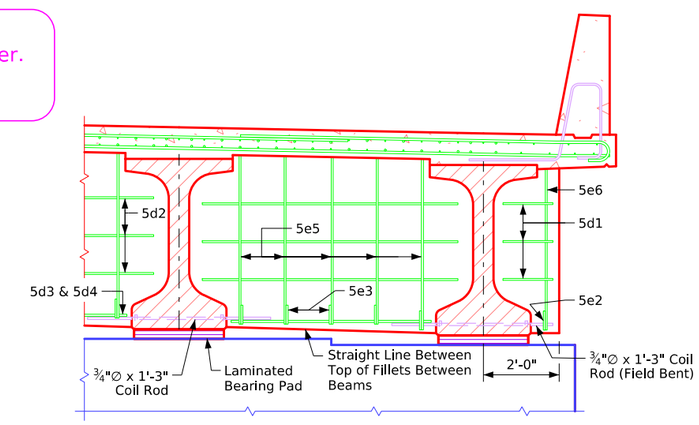

Half Section Near Pier

(Expansion Pier Shown)

Bridge Deck Cross Section

Correction 04-14: Added Concrete Quantity Table & Referral Note to Summary Quantity Sheet. Removed Design Bearing Note for Abut. Piling from Abutment Notes.
Revised 05-2026: In "Drain Details", corrected typo of deck drain radius to R=1'-0" (Typo Was R=2'-0"). In "Half Section Near Pier" details changed Coil Rod to Field Bent (was labeled Bent).
Revised 06-2026: Added horizontal Beam Spacing dimension on cross section details. Was inadvertently changed when dimension style was updated.
BTIntegralBridges.dgn - 4384-BTD-6 - Issued 02-08. This Sheet Re-Issued 11-2023. Sheet Format Update.

Table of Size of "b2" Bar

Longest Adjacent Span	BTE Beam Bar Size
30'-0"	------
35'-0"	------
40'-0"	------
45-0"	------
50'-0"	------
55'-0"	------
60'-0"	**4
65'-0"	**5
70'-0"	**6
75'-0"	**6
80'-0"	**7
85'-0"	**7
90'-0"	**8
95'-0"	**8
100'-0"	**9
105'-0"	**9
110'-0"	7
115'-0"	7
120'-0"	7
125'-0"	8
130'-0"	8
135'-0"	8
140'-0"	9
145'-0"	9
150'-0"	9
155'-0"	9

The midpoint of the 'b2' bar is to be placed at the ℄ of pier.
** Indicates 'b2' bar placed in top deck only.

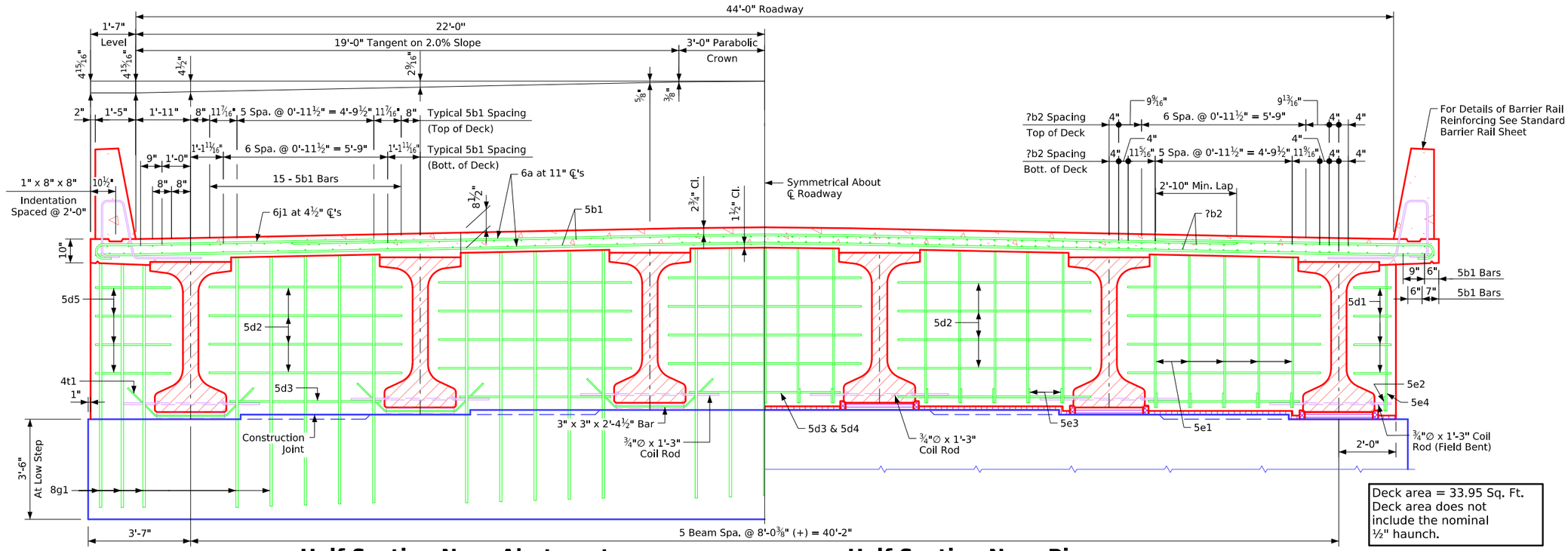

Deck area = 33.95 Sq. Ft.
Deck area does not include the nominal ½" haunch.

Half Section Near Abutment

Half Section Near Pier

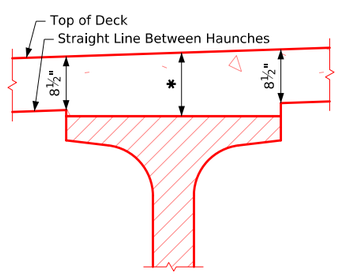

Interior Beams

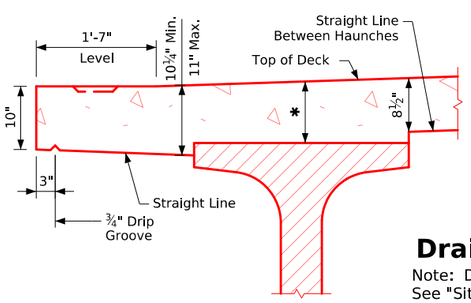

Exterior Beams

Typical Deck and Haunch Detail

* For Deck Thickness Over Beams See "Haunch And Camber Details" on Design Sheet No. ?.

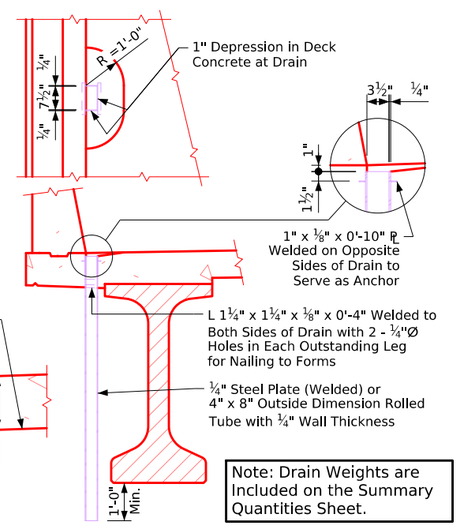

Note: Drain Weights are Included on the Summary Quantities Sheet.

Drain Details

Note: Drains are to be galvanized. ?? Drains required. See "Situation Plan" on Design Sheet No. ? for location. Weight of drains is included in the quantity for "Structural Steel". Weight is based on rolled tube.

Data for One Drain

Beam Size	BTE
Drain Weight (lbs.)	136
Drain Length (ft.)	7'-0¾"

Note: For details of Intermediate Diaphragm see Design Sheet No. ??.

Note to Designer:
6j1 spacing shown for TL-4 barrier.
See Bridge Design Manual
Section 5.2 for TL-5 6j1 spacing.

Superstructure Notes:

The bridge deck as shown includes ¾" integral wearing surface.

The pier and abutment diaphragm concrete is to be placed monolithically with the bridge deck.

Cost of all resilient joint filler material is to be included in the price bid for "Structural Concrete (Bridge)".

All beams are to be set vertical.

Forms for the deck and barrier rail are to be supported by the prestressed concrete beams.

Clear distance from face of concrete to near reinforcing bar shall be 2" unless otherwise noted or shown.

All deck and diaphragm reinforcing is to be wired in place and adequately supported before concrete is placed.

Top transverse reinforcing steel is to be parallel to and 2¾" clear below top of deck. Bottom transverse reinforcing steel is to be parallel to and 1½" clear above bottom of deck. Top and bottom reinforcing steel is to be supported by individual bar chairs spaced at not more than 3'-0" centers longitudinally and transversely, or by continuous rows of bar high chairs or deck bolsters spaced 4'-0" apart. I.M. 451.01 requirements shall apply for bar chairs, bar high chairs, and deck bolsters.

Transverse deck reinforcing may be spliced with one lap located as follows:

Top bar - lap midway between beams (min. lap = 2'-10").

Bottom bars - lap over beams (min. lap = 3'-7").

Payment for reinforcing bars shall be based on no splices, and no allowance shall be made for the additional length of bar required for the use of splices.

Cost for bearing material is to be included in the price bid for "Pretensioned Prestressed Concrete Beams".

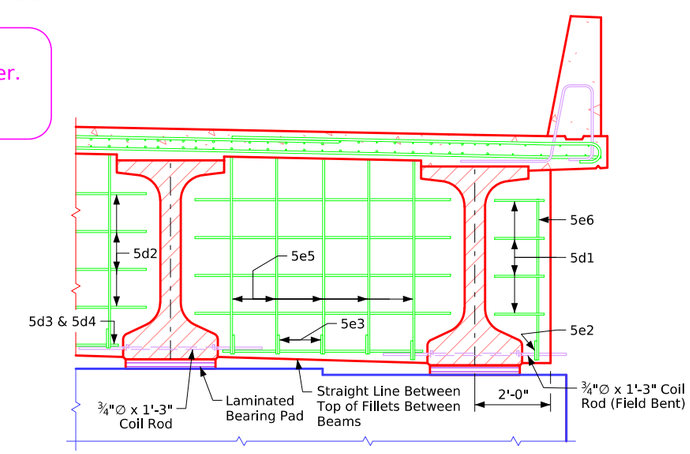

Half Section Near Pier

(Expansion Pier Shown)

Bridge Deck Cross Section

Correction 04-14: Added Concrete Quantity Table & Referral Note to Summary Quantity Sheet. Removed Design Bearing Note for Abut. Piling from Abutment Notes.
Revised 05-2026: In "Drain Details", corrected typo of deck drain radius to R=1'-0" (Typo Was R=2'-0"). In "Half Section Near Pier" details changed Coil Rod to Field Bent (was labeled Bent).
Revised 06-2026: Added horizontal Beam Spacing dimension on cross section details. Was inadvertently changed when dimension style was updated.
BTIntegralBridges.dgn - 4384-BTE-6 - Issued 02-08. This Sheet Re-Issued 11-2023. Sheet Format Update.

Table of Size of "b2" Bar

Longest Adjacent Span	BTB Beam Bar Size
30'-0"	**4
35'-0"	**4
40'-0"	**4
45-0"	**5
50'-0"	**6
55'-0"	**6
60'-0"	**6
65'-0"	**7
70'-0"	**8
75'-0"	**8
80'-0"	**9
85'-0"	7
90'-0"	8
95'-0"	8
100'-0"	8
105'-0"	9

The midpoint of the 'b2' bar is to be placed at the ℄ of pier.
** Indicates 'b2' bar placed in top deck only.

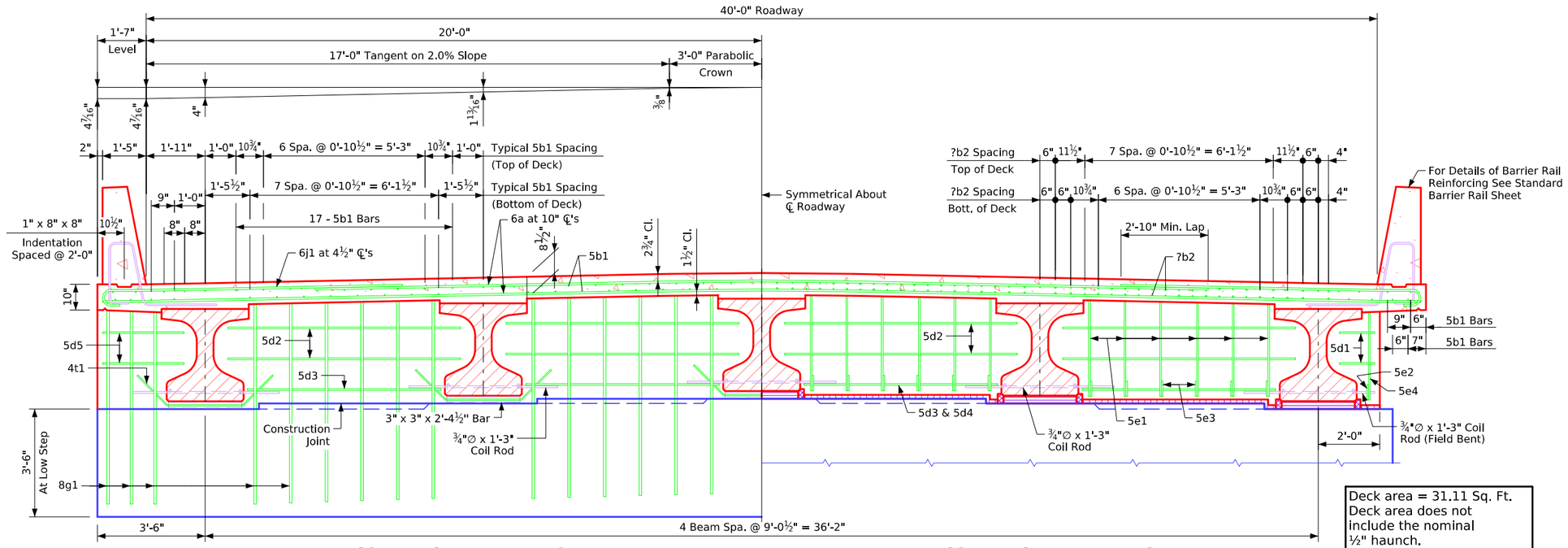

Half Section Near Abutment **Half Section Near Pier**

Deck area = 31.11 Sq. Ft.
Deck area does not include the nominal ½" haunch.

Note: For details of Intermediate Diaphragm see Design Sheet No. ??.

Note to Designer:
6j1 spacing shown for TL-4 barrier.
See Bridge Design Manual Section 5.2 for TL-5 6j1 spacing.

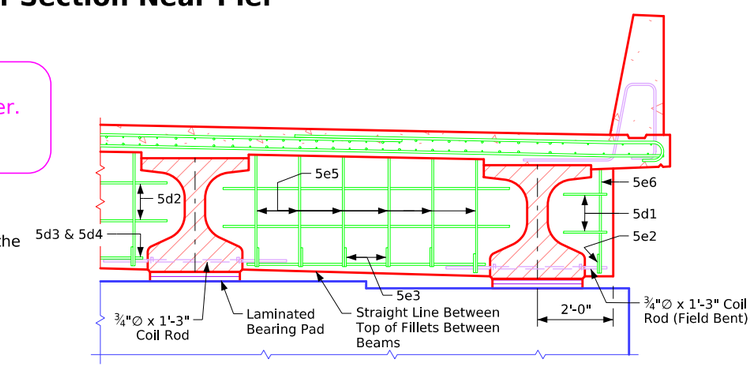

Half Section Near Pier
(Expansion Pier Shown)

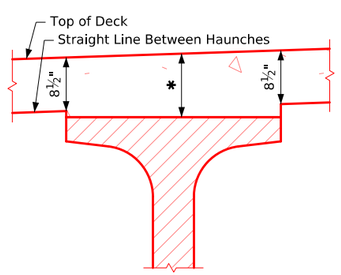

Interior Beams

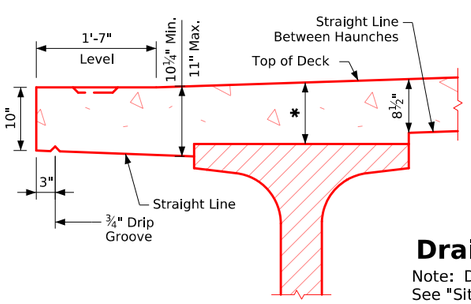

Exterior Beams

Typical Deck and Haunch Detail

* For Deck Thickness Over Beams See "Haunch And Camber Details" on Design Sheet No. ?.

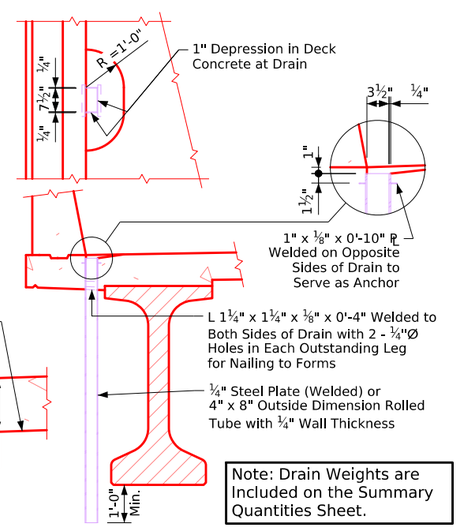

Note: Drain Weights are Included on the Summary Quantities Sheet.

Drain Details

Note: Drains are to be galvanized. ?? Drains required. See "Situation Plan" on Design Sheet No. ? for location. Weight of drains is included in the quantity for "Structural Steel". Weight is based on rolled tube.

Data for One Drain	
Beam Size	BTB
Drain Weight (lbs.)	92
Drain Length (ft.)	4'-9¾"

Superstructure Notes:

The bridge deck as shown includes ¾" integral wearing surface.

The pier and abutment diaphragm concrete is to be placed monolithically with the bridge deck.

Cost of all resilient joint filler material is to be included in the price bid for "Structural Concrete (Bridge)".

All beams are to be set vertical.

Forms for the deck and barrier rail are to be supported by the prestressed concrete beams.

Clear distance from face of concrete to near reinforcing bar shall be 2" unless otherwise noted or shown.

All deck and diaphragm reinforcing is to be wired in place and adequately supported before concrete is placed.

Top transverse reinforcing steel is to be parallel to and 2¾" clear below top of deck. Bottom transverse reinforcing steel is to be parallel to and 1½" clear above bottom of deck. Top and bottom reinforcing steel is to be supported by individual bar chairs spaced at not more than 3'-0" centers longitudinally and transversely, or by continuous rows of bar high chairs or deck bolsters spaced 4'-0" apart. I.M. 451.01 requirements shall apply for bar chairs, bar high chairs, and deck bolsters.

Transverse deck reinforcing may be spliced with one lap located as follows:

Top bar - lap midway between beams (min. lap = 2'-10").

Bottom bars - lap over beams (min. lap = 3'-7").

Payment for reinforcing bars shall be based on no splices, and no allowance shall be made for the additional length of bar required for the use of splices.

Cost for bearing material is to be included in the price bid for "Pretensioned Prestressed Concrete Beams".

Bridge Deck Cross Section

Correction 04-14: Added Concrete Quantity Table & Referral Note to Summary Quantity Sheet. Removed Design Bearing Note for Abut. Piling from Abutment Notes.
Revised 05-2026: In "Drain Details", corrected typo of deck drain radius to R=1'-0" (Typo Was R=2'-0"). In "Half Section Near Pier" details changed Coil Rod to Field Bent (was labeled Bent).
BTIntegralBridges.dgn - 4385-BTD-5 - Issued 02-08. This Sheet Re-Issued 11-2023. Sheet Format Update.

Table of Size of "b2" Bar

Longest Adjacent Span	BTB Beam Bar Size
30'-0"	**4
35'-0"	**4
40'-0"	**4
45-0"	**5
50'-0"	**6
55'-0"	**6
60'-0"	**6
65'-0"	**7
70'-0"	**8
75'-0"	**8
80'-0"	**9
85'-0"	7
90'-0"	8
95'-0"	8
100'-0"	8
105'-0"	9

The midpoint of the 'b2' bar is to be placed at the ℄ of pier.
** Indicates 'b2' bar placed in top deck only.

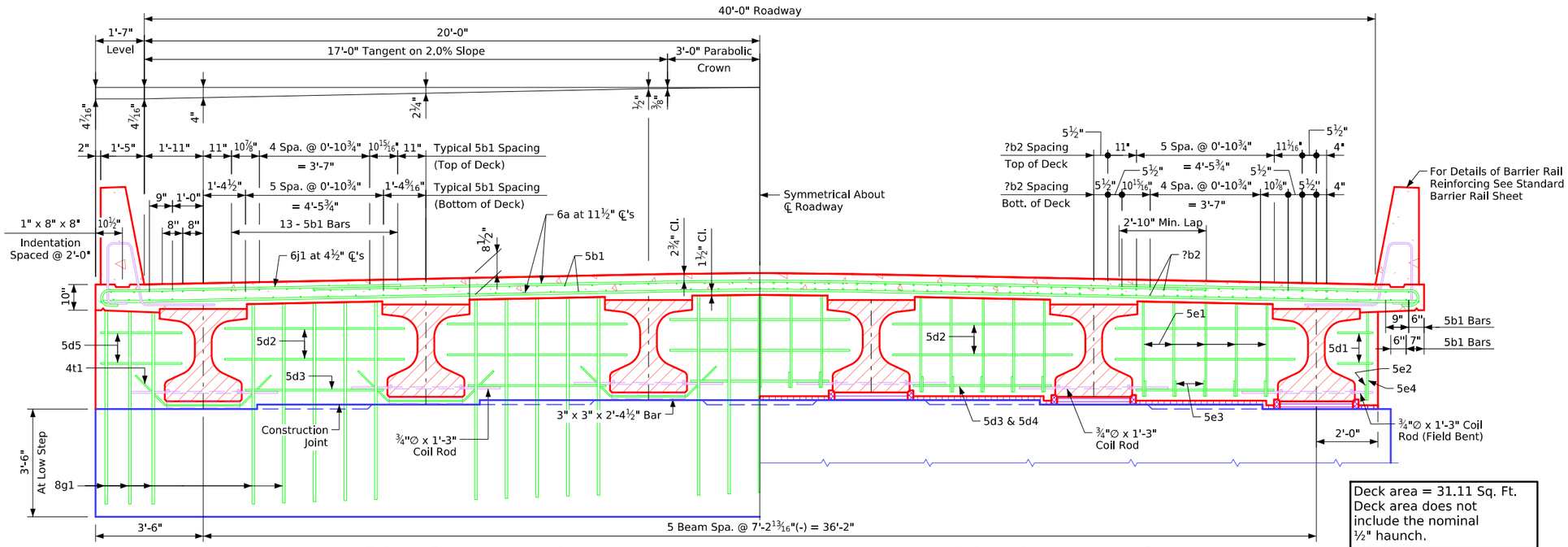

Deck area = 31.11 Sq. Ft.
Deck area does not include the nominal ½" haunch.

Half Section Near Abutment **Half Section Near Pier**

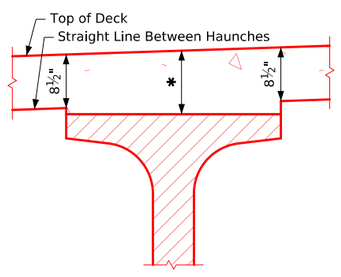

Interior Beams

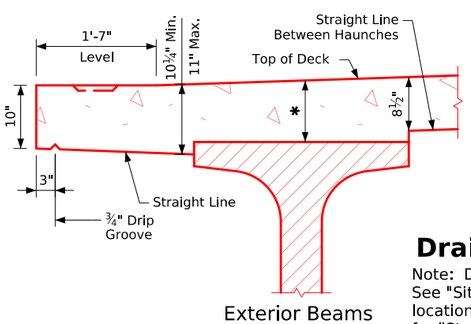

Exterior Beams

Typical Deck and Haunch Detail

* For Deck Thickness Over Beams See "Haunch And Camber Details" on Design Sheet No. ?.

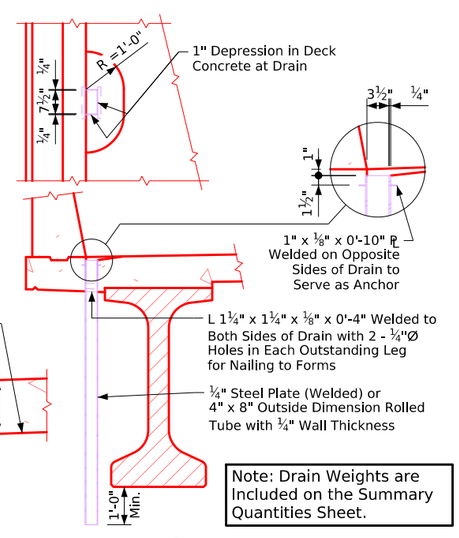

Note: Drain Weights are Included on the Summary Quantities Sheet.

Drain Details

Note: Drains are to be galvanized. ?? Drains required. See "Situation Plan" on Design Sheet No. ? for location. Weight of drains is included in the quantity for "Structural Steel". Weight is based on rolled tube.

Data for One Drain

Beam Size	BTB
Drain Weight (lbs.)	92
Drain Length (ft.)	4'-9¾"

Note: For details of Intermediate Diaphragm see Design Sheet No. ??.

Note to Designer:
6j1 spacing shown for TL-4 barrier. See Bridge Design Manual Section 5.2 for TL-5 6j1 spacing.

Superstructure Notes:

The bridge deck as shown includes ¾" integral wearing surface.

The pier and abutment diaphragm concrete is to be placed monolithically with the bridge deck.

Cost of all resilient joint filler material is to be included in the price bid for "Structural Concrete (Bridge)".

All beams are to be set vertical.

Forms for the deck and barrier rail are to be supported by the prestressed concrete beams.

Clear distance from face of concrete to near reinforcing bar shall be 2" unless otherwise noted or shown.

All deck and diaphragm reinforcing is to be wired in place and adequately supported before concrete is placed.

Top transverse reinforcing steel is to be parallel to and 2¾" clear below top of deck. Bottom transverse reinforcing steel is to be parallel to and 1½" clear above bottom of deck. Top and bottom reinforcing steel is to be supported by individual bar chairs spaced at not more than 3'-0" centers longitudinally and transversely, or by continuous rows of bar high chairs or deck bolsters spaced 4'-0" apart. I.M. 451.01 requirements shall apply for bar chairs, bar high chairs, and deck bolsters.

Transverse deck reinforcing may be spliced with one lap located as follows:

Top bar - lap midway between beams (min. lap = 2'-10").

Bottom bars - lap over beams (min. lap = 3'-7").

Payment for reinforcing bars shall be based on no splices, and no allowance shall be made for the additional length of bar required for the use of splices.

Cost for bearing material is to be included in the price bid for "Pretensioned Prestressed Concrete Beams".

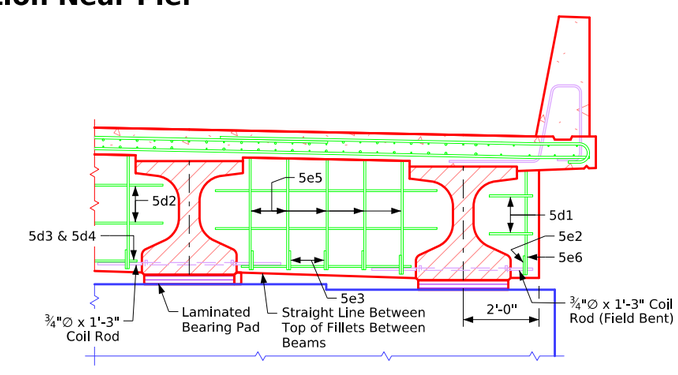

Half Section Near Pier
(Expansion Pier Shown)

Bridge Deck Cross Section

Note for Abut. Piling from Abutment Notes.
Near Pier" details changed Coil Rod to Field Bent (was labeled Bent).

Correction 04-14: Added Concrete Quantity Table & Referral Note to Summary Quantity Sheet. Removed Design Bearing Note for Abut.
Revised 05-2026: In "Drain Details", corrected typo of deck drain radius to R=1'-0" (Typo Was R=2'-0"). In "Half Section Near Pier"
BTIntegralBridges.dgn - 4385-BTB-6 - Issued 02-08. This Sheet Re-Issued 11-2023. Sheet Format Update.

Table of Size of "b2" Bar

Longest Adjacent Span	BTC Beam Bar Size
30'-0"	**4
35'-0"	**4
40-'0"	**4
45-0"	**4
50'-0"	**4
55'-0"	**4
60'-0"	**6
65'-0"	**7
70'-0"	**7
75'-0"	**8
80'-0"	**9
85'-0"	**9
90'-0"	7
95'-0"	7
100'-0"	8
105'-0"	8
110'-0"	8
115'-0"	8
120'-0"	8

The midpoint of the 'b2' bar is to be placed at the ℄ of pier.
** Indicates 'b2' bar placed in top deck only.

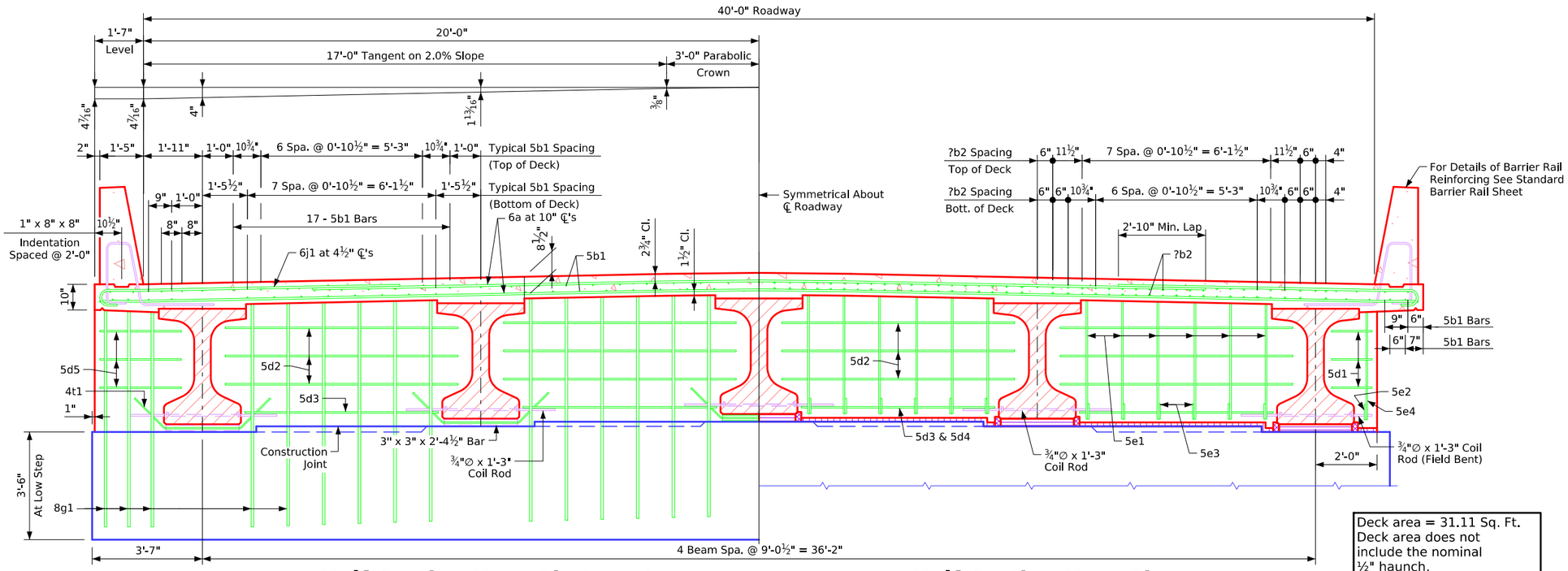

Deck area = 31.11 Sq. Ft.
Deck area does not include the nominal ½" haunch.

Half Section Near Abutment

Half Section Near Pier

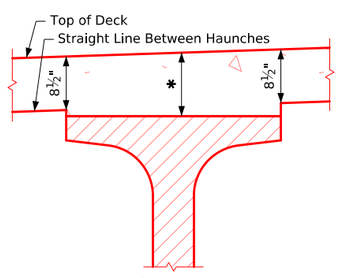

Interior Beams

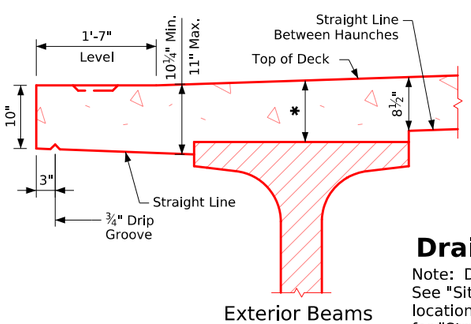

Exterior Beams

Typical Deck and Haunch Detail

* For Deck Thickness Over Beams See "Haunch And Camber Details" on Design Sheet No. ?.

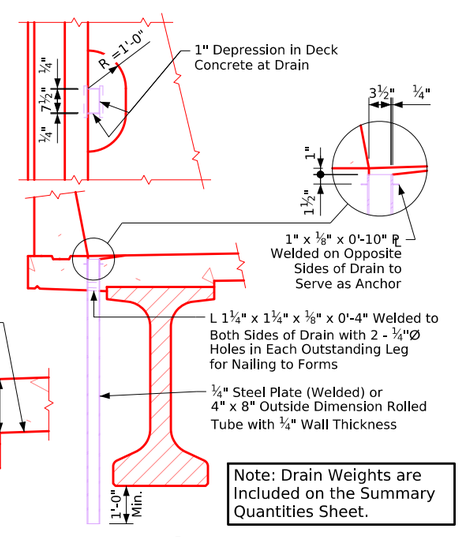

Note: Drain Weights are Included on the Summary Quantities Sheet.

Drain Details

Note: Drains are to be galvanized. ?? Drains required. See "Situation Plan" on Design Sheet No. ? for location. Weight of drains is included in the quantity for "Structural Steel". Weight is based on rolled tube.

Data for One Drain

Beam Size	BTC
Drain Weight (lbs.)	106
Drain Length (ft.)	5'-6¾"

Note: For details of Intermediate Diaphragm see Design Sheet No. ??.

Note to Designer:
6j1 spacing shown for TL-4 barrier.
See Bridge Design Manual Section 5.2 for TL-5 6j1 spacing.

Superstructure Notes:

The bridge deck as shown includes ¾" integral wearing surface.

The pier and abutment diaphragm concrete is to be placed monolithically with the bridge deck.

Cost of all resilient joint filler material is to be included in the price bid for "Structural Concrete (Bridge)".

All beams are to be set vertical.

Forms for the deck and barrier rail are to be supported by the prestressed concrete beams.

Clear distance from face of concrete to near reinforcing bar shall be 2" unless otherwise noted or shown.

All deck and diaphragm reinforcing is to be wired in place and adequately supported before concrete is placed.

Top transverse reinforcing steel is to be parallel to and 2¾" clear below top of deck. Bottom transverse reinforcing steel is to be parallel to and 1½" clear above bottom of deck. Top and bottom reinforcing steel is to be supported by individual bar chairs spaced at not more than 3'-0" centers longitudinally and transversely, or by continuous rows of bar high chairs or deck bolsters spaced 4'-0" apart. I.M. 451.01 requirements shall apply for bar chairs, bar high chairs, and deck bolsters.

Transverse deck reinforcing may be spliced with one lap located as follows:

Top bar - lap midway between beams (min. lap = 2'-10").

Bottom bars - lap over beams (min. lap = 3'-7").

Payment for reinforcing bars shall be based on no splices, and no allowance shall be made for the additional length of bar required for the use of splices.

Cost for bearing material is to be included in the price bid for "Pretensioned Prestressed Concrete Beams".

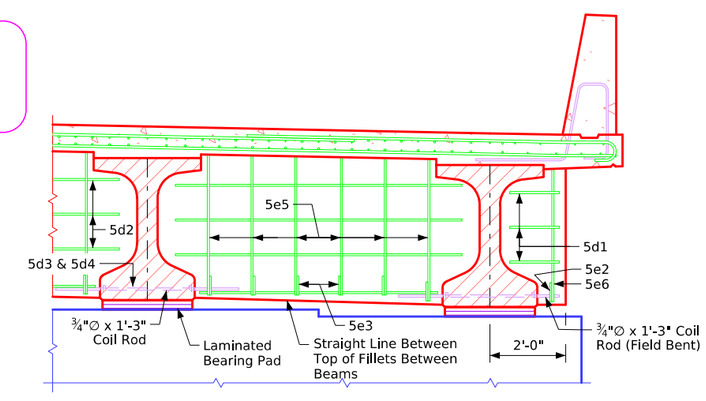

Half Section Near Pier

(Expansion Pier Shown)

Bridge Deck Cross Section

Correction 04-14: Added Concrete Quantity Table & Referral Note to Summary Quantity Sheet. Removed Design Bearing Note for Abut. Piling from Abutment Notes.
Revised 05-2026: In "Drain Details", corrected typo of deck drain radius to R=1'-0" (Typo Was R=2'-0"). In "Half Section Near Pier" details changed Coil Rod to Field Bent (was labeled Bent).
BTIntegralBridges.dgn - 4385-BTC-5 - Issued 02-08. This Sheet Re-Issued 11-2023. Sheet Format Update.

Table of Size of "b2" Bar

Longest Adjacent Span	BTC Beam Bar Size
30'-0"	**4
35'-0"	**4
40-'0"	**4
45-0"	**4
50'-0"	**4
55'-0"	**4
60'-0"	**6
65'-0"	**7
70'-0"	**7
75'-0"	**8
80'-0"	**9
85'-0"	**9
90'-0"	7
95'-0"	7
100'-0"	8
105'-0"	8
110'-0"	8
115'-0"	8
120'-0"	8

The midpoint of the 'b2' bar is to be placed at the ℄ of pier.
** Indicates 'b2' bar placed in top deck only.

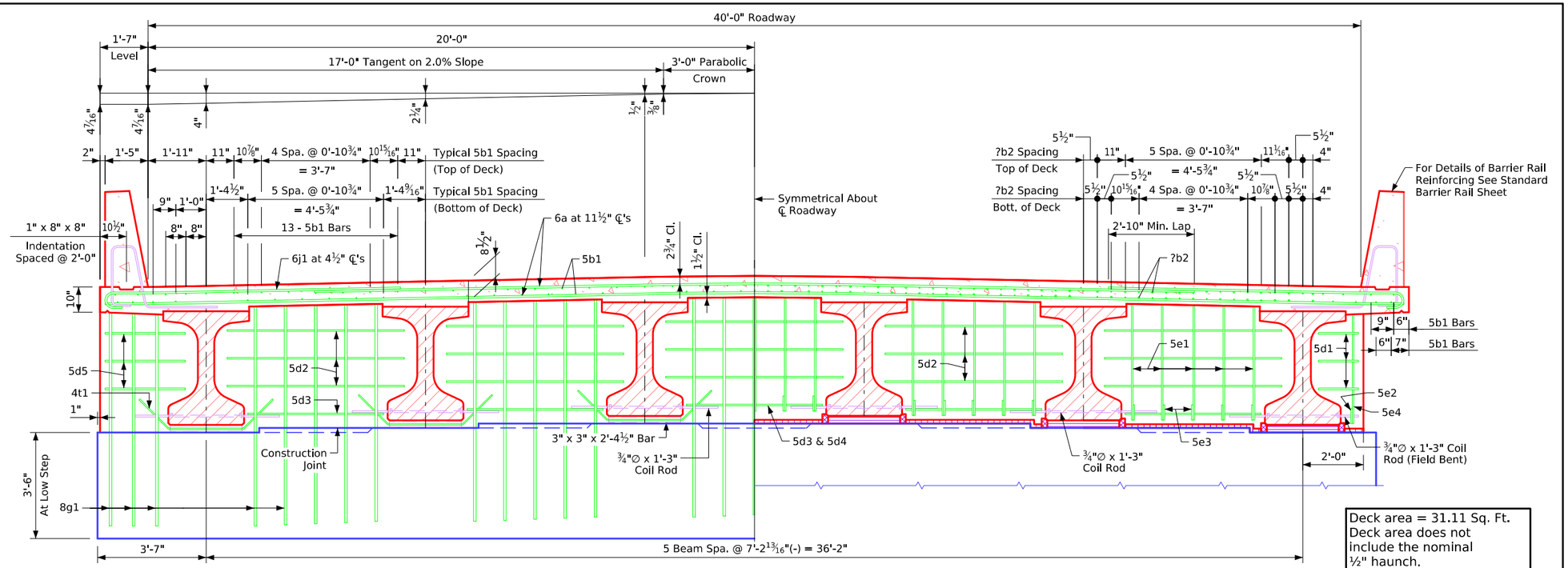

Half Section Near Abutment **Half Section Near Pier**

Deck area = 31.11 Sq. Ft.
Deck area does not include the nominal ½" haunch.

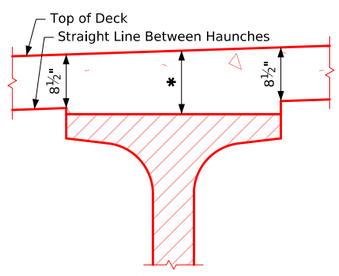

Interior Beams

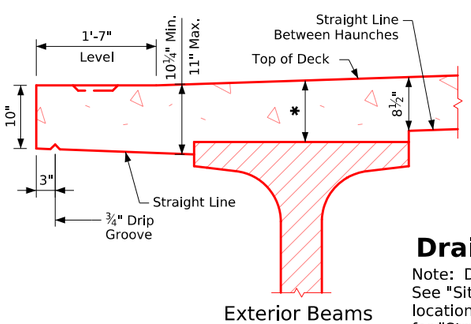

Exterior Beams

Typical Deck and Haunch Detail

* For Deck Thickness Over Beams See "Haunch And Camber Details" on Design Sheet No. ?.

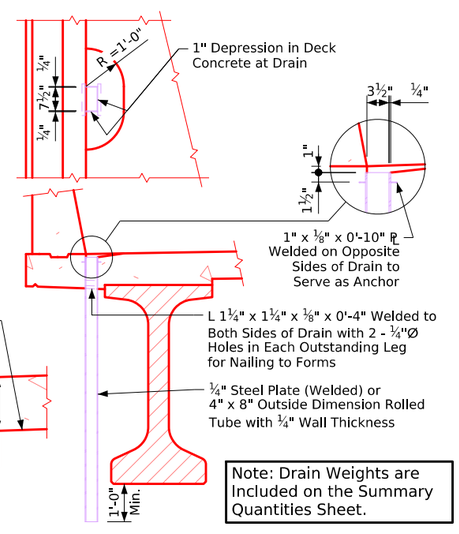

Note: Drain Weights are Included on the Summary Quantities Sheet.

Drain Details

Note: Drains are to be galvanized. ?? Drains required. See "Situation Plan" on Design Sheet No. ? for location. Weight of drains is included in the quantity for "Structural Steel". Weight is based on rolled tube.

Data for One Drain

Beam Size	BTC
Drain Weight (lbs.)	106
Drain Length (ft.)	5'-6¾"

Note: For details of Intermediate Diaphragm see Design Sheet No. ??.

Note to Designer:
6j1 spacing shown for TL-4 barrier. See Bridge Design Manual Section 5.2 for TL-5 6j1 spacing.

Superstructure Notes:

The bridge deck as shown includes ¾" integral wearing surface.

The pier and abutment diaphragm concrete is to be placed monolithically with the bridge deck.

Cost of all resilient joint filler material is to be included in the price bid for "Structural Concrete (Bridge)".

All beams are to be set vertical.

Forms for the deck and barrier rail are to be supported by the prestressed concrete beams.

Clear distance from face of concrete to near reinforcing bar shall be 2" unless otherwise noted or shown.

All deck and diaphragm reinforcing is to be wired in place and adequately supported before concrete is placed.

Top transverse reinforcing steel is to be parallel to and 2¾" clear below top of deck. Bottom transverse reinforcing steel is to be parallel to and 1½" clear above bottom of deck. Top and bottom reinforcing steel is to be supported by individual bar chairs spaced at not more than 3'-0" centers longitudinally and transversely, or by continuous rows of bar high chairs or deck bolsters spaced 4'-0" apart. I.M. 451.01 requirements shall apply for bar chairs, bar high chairs, and deck bolsters.

Transverse deck reinforcing may be spliced with one lap located as follows:

Top bar - lap midway between beams (min. lap = 2'-10").

Bottom bars - lap over beams (min. lap = 3'-7").

Payment for reinforcing bars shall be based on no splices, and no allowance shall be made for the additional length of bar required for the use of splices.

Cost for bearing material is to be included in the price bid for "Pretensioned Prestressed Concrete Beams".

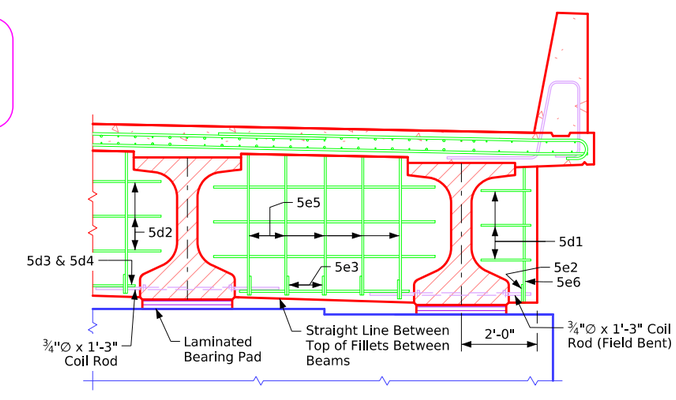

Half Section Near Pier
(Expansion Pier Shown)

Bridge Deck Cross Section

Correction 04-14: Added Concrete Quantity Table & Referral Note to Summary Quantity Sheet. Removed Design Bearing Note for Abut. Piling from Abutment Notes.
Revised 05-2026: In "Drain Details", corrected typo of deck drain radius to R=1'-0" (Typo Was R=2'-0"). In "Half Section Near Pier" details changed Coil Rod to Field Bent (was labeled Bent).
BTIntegralBridges.dgn - 4385-BTC-6 - Issued 02-08. This Sheet Re-Issued 11-2023. Sheet Format Update.

Table of Size of "b2" Bar

Longest Adjacent Span	BTD Beam Bar Size
30'-0"	------
35'-0"	------
40-'0"	------
45-0"	------
50'-0"	**4
55'-0"	**4
60'-0"	**5
65'-0"	**6
70'-0"	**6
75'-0"	**7
80'-0"	**8
85'-0"	**8
90'-0"	**9
95'-0"	**9
100'-0"	7
105'-0"	7
110'-0"	8
115'-0"	8
120'-0"	8
125'-0"	8
130'-0"	9
135'-0"	9

The midpoint of the 'b2' bar is to be placed at the ℄ of pier.
** Indicates 'b2' bar placed in top deck only.

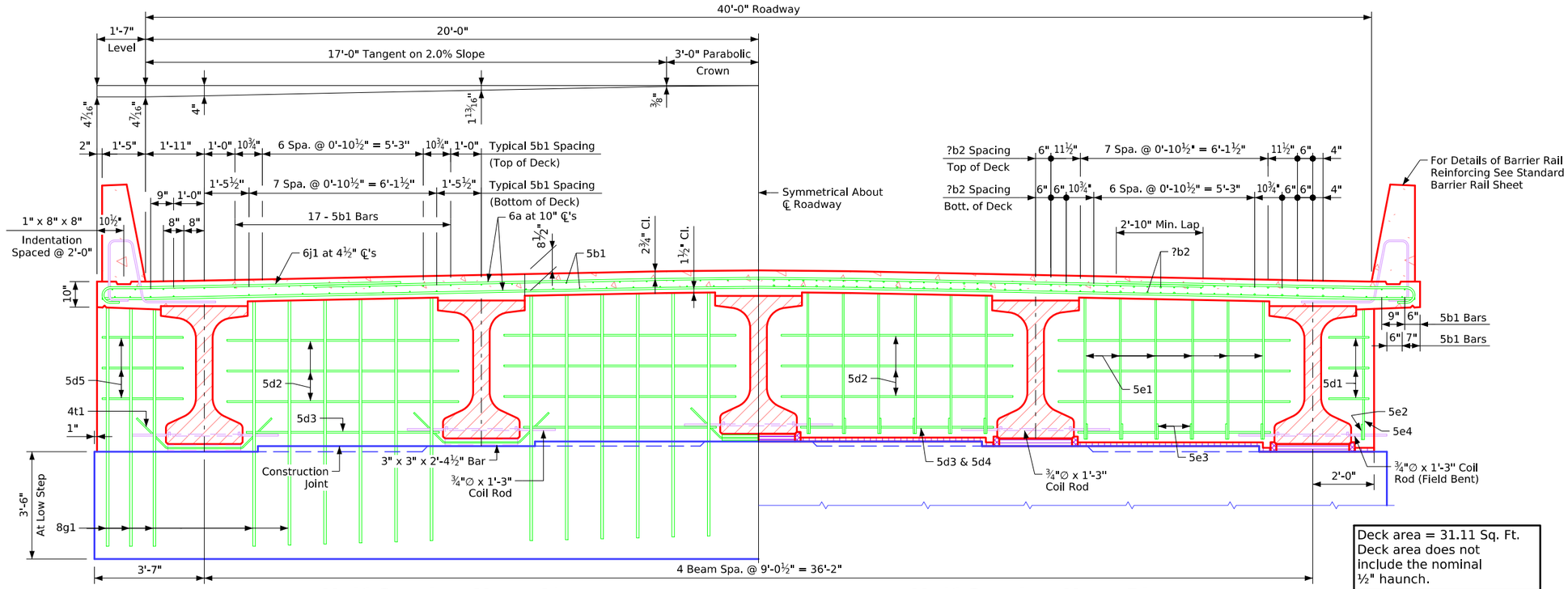

Deck area = 31.11 Sq. Ft.
Deck area does not include the nominal ½" haunch.

Half Section Near Abutment

Half Section Near Pier

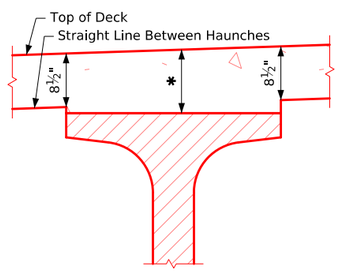

Interior Beams

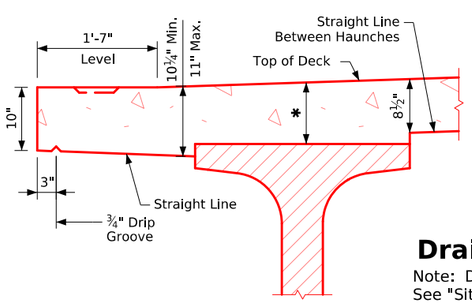

Exterior Beams

Typical Deck and Haunch Detail

* For Deck Thickness Over Beams See "Haunch And Camber Details" on Design Sheet No. ?.

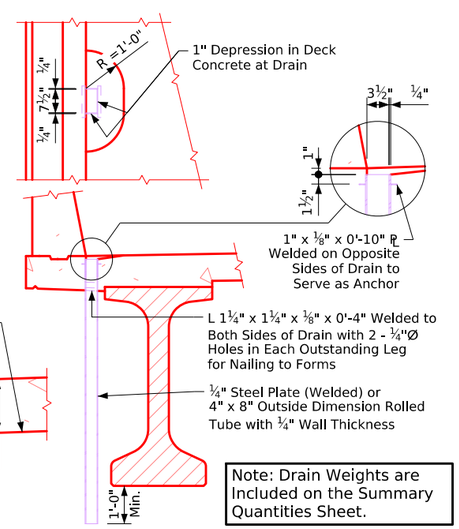

Note: Drain Weights are Included on the Summary Quantities Sheet.

Drain Details

Note: Drains are to be galvanized. ?? Drains required. See "Situation Plan" on Design Sheet No. ? for location. Weight of drains is included in the quantity for "Structural Steel". Weight is based on rolled tube.

Data for One Drain

Beam Size	BTD
Drain Weight (lbs.)	120
Drain Length (ft.)	6'-3¾"

Note: For details of Intermediate Diaphragm see Design Sheet No. ??.

Note to Designer:
6j1 spacing shown for TL-4 barrier.
See Bridge Design Manual Section 5.2 for TL-5 6j1 spacing.

Superstructure Notes:

The bridge deck as shown includes ¾" integral wearing surface.

The pier and abutment diaphragm concrete is to be placed monolithically with the bridge deck.

Cost of all resilient joint filler material is to be included in the price bid for "Structural Concrete (Bridge)".

All beams are to be set vertical.

Forms for the deck and barrier rail are to be supported by the prestressed concrete beams.

Clear distance from face of concrete to near reinforcing bar shall be 2" unless otherwise noted or shown.

All deck and diaphragm reinforcing is to be wired in place and adequately supported before concrete is placed.

Top transverse reinforcing steel is to be parallel to and 2¾" clear below top of deck. Bottom transverse reinforcing steel is to be parallel to and 1½" clear above bottom of deck. Top and bottom reinforcing steel is to be supported by individual bar chairs spaced at not more than 3'-0" centers longitudinally and transversely, or by continuous rows of bar high chairs or deck bolsters spaced 4'-0" apart. I.M. 451.01 requirements shall apply for bar chairs, bar high chairs, and deck bolsters.

Transverse deck reinforcing may be spliced with one lap located as follows:

Top bar - lap midway between beams (min. lap = 2'-10").

Bottom bars - lap over beams (min. lap = 3'-7").

Payment for reinforcing bars shall be based on no splices, and no allowance shall be made for the additional length of bar required for the use of splices.

Cost for bearing material is to be included in the price bid for "Pretensioned Prestressed Concrete Beams".

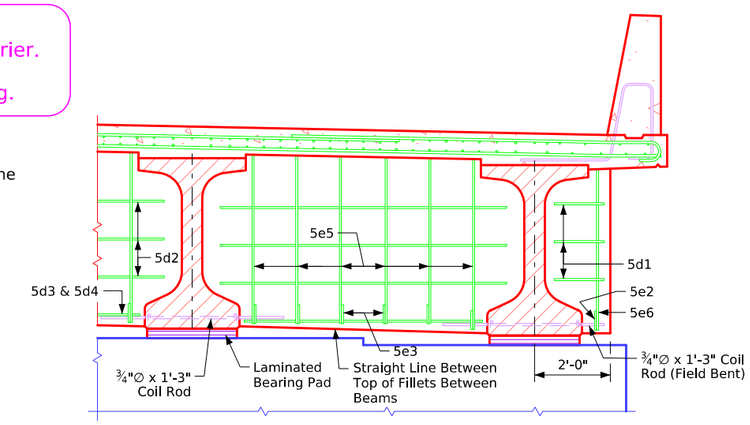

Half Section Near Pier

(Expansion Pier Shown)

Bridge Deck Cross Section

Correction 04-14: Added Concrete Quantity Table & Referral Note to Summary Quantity Sheet. Removed Design Bearing Note for Abut. Piling from Abutment Notes.
Revised 05-2026: In "Drain Details", corrected typo of deck drain radius to R=1'-0" (Typo Was R=2'-0"). In "Half Section Near Pier" details changed Coil Rod to Field Bent (was labeled Bent).
BTIntegralBridges.dgn - 4385-BTD-5 - Issued 02-08. This Sheet Re-Issued 11-2023. Sheet Format Update.

Table of Size of "b2" Bar

Longest Adjacent Span	BTE Beam Bar Size
30'-0"	------
35'-0"	------
40'-0"	------
45-0"	------
50'-0"	------
55'-0"	------
60'-0"	**4
65'-0"	**5
70'-0"	**6
75'-0"	**6
80'-0"	**7
85'-0"	**7
90'-0"	**8
95'-0"	**8
100'-0"	**9
105'-0"	**9
110'-0"	7
115'-0"	7
120'-0"	7
125'-0"	8
130'-0"	8
135'-0"	8
140'-0"	9
145'-0"	9
150'-0"	9
155'-0"	9

The midpoint of the 'b2' bar is to be placed at the ℄ of pier.
** Indicates 'b2' bar placed in top deck only.

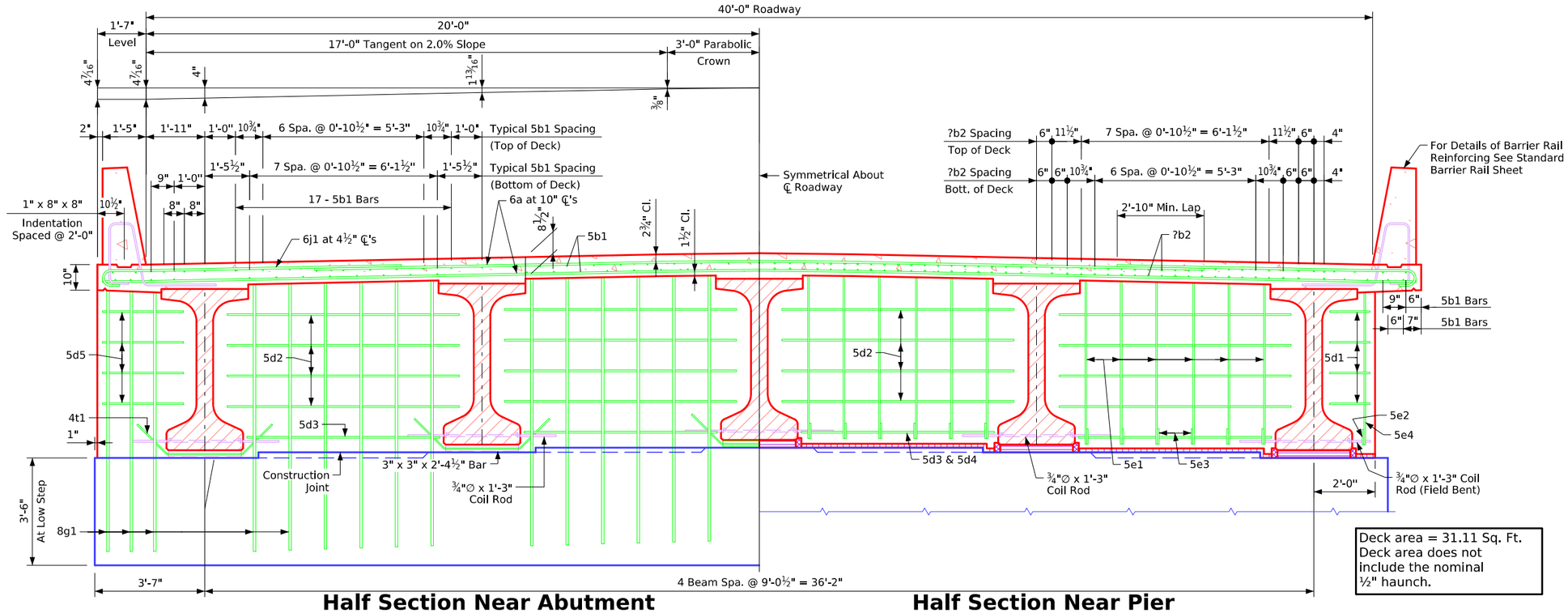

Half Section Near Abutment **Half Section Near Pier**

Deck area = 31.11 Sq. Ft.
Deck area does not include the nominal ½" haunch.

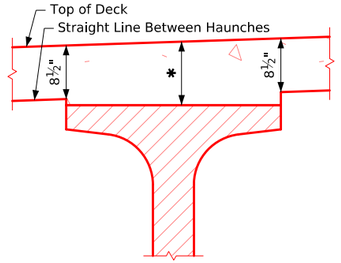

Interior Beams

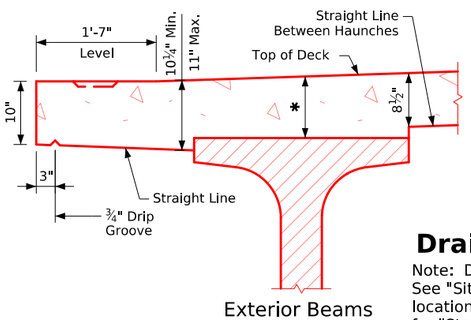

Exterior Beams

Typical Deck and Haunch Detail

* For Deck Thickness Over Beams See "Haunch And Camber Details" on Design Sheet No. ?.

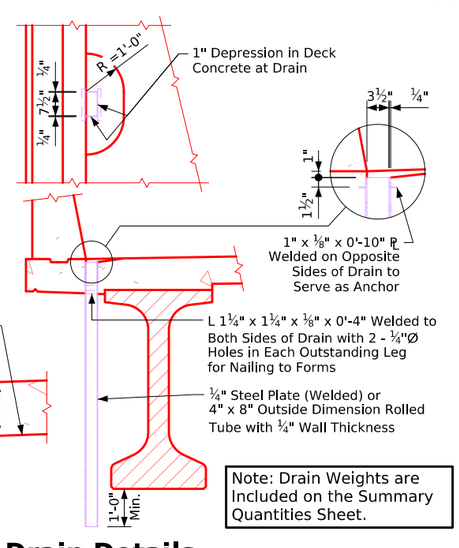

Note: Drain Weights are Included on the Summary Quantities Sheet.

Drain Details

Note: Drains are to be galvanized. ?? Drains required. See "Situation Plan" on Design Sheet No. ? for location. Weight of drains is included in the quantity for "Structural Steel". Weight is based on rolled tube.

Data for One Drain	
Beam Size	BTE
Drain Weight (lbs.)	136
Drain Length (ft.)	7'-0¾"

Note: For details of Intermediate Diaphragm see Design Sheet No. ??.

Note to Designer:
6j1 spacing shown for TL-4 barrier.
See Bridge Design Manual Section 5.2 for TL-5 6j1 spacing.

Superstructure Notes:

The bridge deck as shown includes ¾" integral wearing surface.

The pier and abutment diaphragm concrete is to be placed monolithically with the bridge deck.

Cost of all resilient joint filler material is to be included in the price bid for "Structural Concrete (Bridge)".

All beams are to be set vertical.

Forms for the deck and barrier rail are to be supported by the prestressed concrete beams.

Clear distance from face of concrete to near reinforcing bar shall be 2" unless otherwise noted or shown.

All deck and diaphragm reinforcing is to be wired in place and adequately supported before concrete is placed.

Top transverse reinforcing steel is to be parallel to and 2¾" clear below top of deck. Bottom transverse reinforcing steel is to be parallel to and 1½" clear above bottom of deck. Top and bottom reinforcing steel is to be supported by individual bar chairs spaced at not more than 3'-0" centers longitudinally and transversely, or by continuous rows of bar high chairs or deck bolsters spaced 4'-0" apart. I.M. 451.01 requirements shall apply for bar chairs, bar high chairs, and deck bolsters.

Transverse deck reinforcing may be spliced with one lap located as follows:

Top bar - lap midway between beams (min. lap = 2'-10").

Bottom bars - lap over beams (min. lap = 3'-7").

Payment for reinforcing bars shall be based on no splices, and no allowance shall be made for the additional length of bar required for the use of splices.

Cost for bearing material is to be included in the price bid for "Pretensioned Prestressed Concrete Beams".

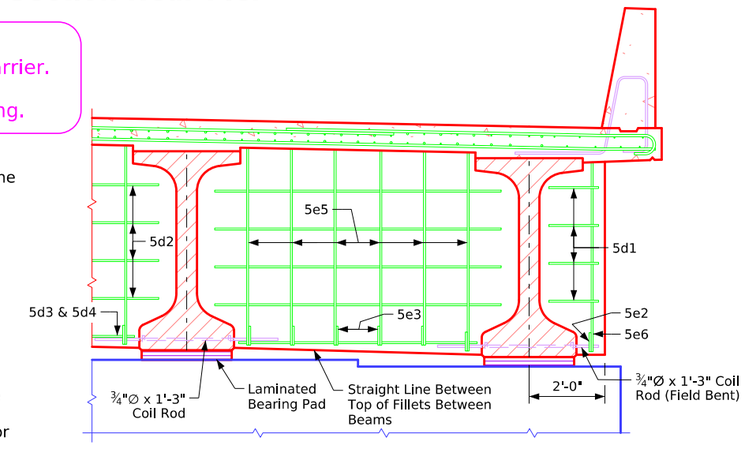

Half Section Near Pier
(Expansion Pier Shown)

Bridge Deck Cross Section

Correction 04-14: Added Concrete Quantity Table & Referral Note to Summary Quantity Sheet. Removed Design Bearing Note from Abut. Piling from Abutment Notes.
Revised 05-2026: In "Drain Details", corrected typo of deck drain radius to R=1'-0" (Typo Was R=2'-0"). In "Half Section Near Pier" details changed Coil Rod to Field Bent (was labeled Bent).
BTIntegralBridges.dgn - 4385-BTE-5 - Issued 02-08. This Sheet Re-Issued 11-2023. Sheet Format Update.

Table of Size of "b2" Bar

Longest Adjacent Span	BTE Beam Bar Size
30'-0"	------
35'-0"	------
40'-0"	------
45-0"	------
50'-0"	------
55'-0"	------
60'-0"	**4
65'-0"	**5
70'-0"	**6
75'-0"	**6
80'-0"	**7
85'-0"	**7
90'-0"	**8
95'-0"	**8
100'-0"	**9
105'-0"	**9
110'-0"	7
115'-0"	7
120'-0"	7
125'-0"	8
130'-0"	8
135'-0"	8
140'-0"	9
145'-0"	9
150'-0"	9
155'-0"	9

The midpoint of the 'b2' bar is to be placed at the ℄ of pier.
** Indicates 'b2' bar placed in top deck only.

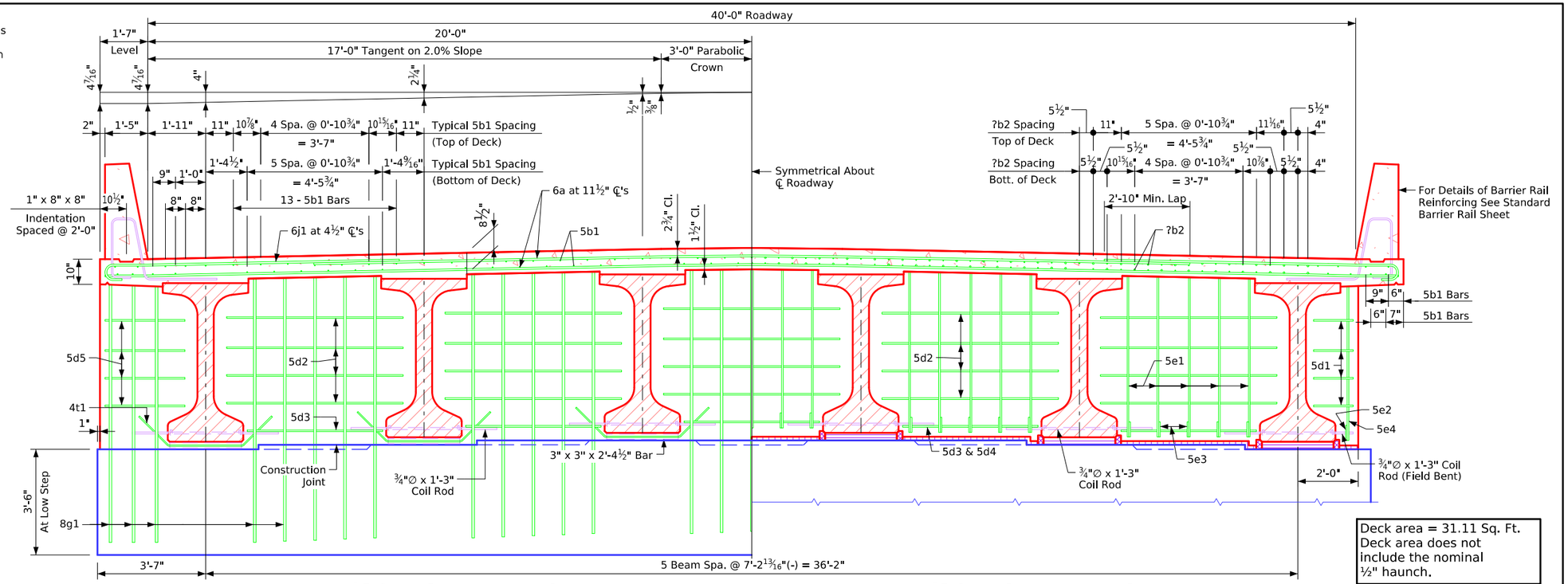

Half Section Near Abutment

Half Section Near Pier

Deck area = 31.11 Sq. Ft.
Deck area does not include the nominal ½" haunch.

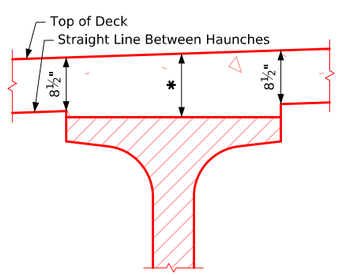

Interior Beams

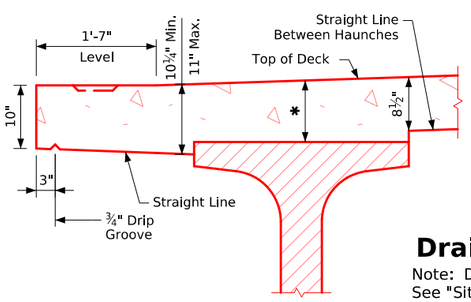

Exterior Beams

Typical Deck and Haunch Detail

* For Deck Thickness Over Beams See "Haunch And Camber Details" on Design Sheet No. ?.

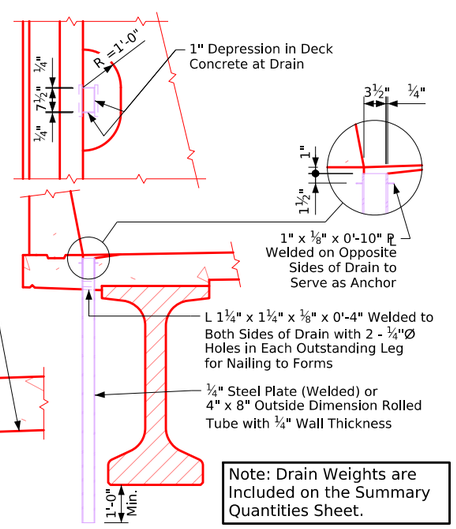

Note: Drain Weights are Included on the Summary Quantities Sheet.

Drain Details

Note: Drains are to be galvanized. ?? Drains required. See "Situation Plan" on Design Sheet No. ? for location. Weight of drains is included in the quantity for "Structural Steel". Weight is based on rolled tube.

Data for One Drain	
Beam Size	BTE
Drain Weight (lbs.)	136
Drain Length (ft.)	7'-0 3/4"

Note: For details of Intermediate Diaphragm see Design Sheet No. ??.

Note to Designer:
6j1 spacing shown for TL-4 barrier.
See Bridge Design Manual Section 5.2 for TL-5 6j1 spacing.

Superstructure Notes:

The bridge deck as shown includes 3/4" integral wearing surface.

The pier and abutment diaphragm concrete is to be placed monolithically with the bridge deck.

Cost of all resilient joint filler material is to be included in the price bid for "Structural Concrete (Bridge)".

All beams are to be set vertical.

Forms for the deck and barrier rail are to be supported by the prestressed concrete beams.

Clear distance from face of concrete to near reinforcing bar shall be 2" unless otherwise noted or shown.

All deck and diaphragm reinforcing is to be wired in place and adequately supported before concrete is placed.

Top transverse reinforcing steel is to be parallel to and 2 3/4" clear below top of deck. Bottom transverse reinforcing steel is to be parallel to and 1 1/2" clear above bottom of deck. Top and bottom reinforcing steel is to be supported by individual bar chairs spaced at not more than 3'-0" centers longitudinally and transversely, or by continuous rows of bar high chairs or deck bolsters spaced 4'-0" apart. I.M. 451.01 requirements shall apply for bar chairs, bar high chairs, and deck bolsters.

Transverse deck reinforcing may be spliced with one lap located as follows:

Top bar - lap midway between beams (min. lap = 2'-10").

Bottom bars - lap over beams (min. lap = 3'-7").

Payment for reinforcing bars shall be based on no splices, and no allowance shall be made for the additional length of bar required for the use of splices.

Cost for bearing material is to be included in the price bid for "Pretensioned Prestressed Concrete Beams".

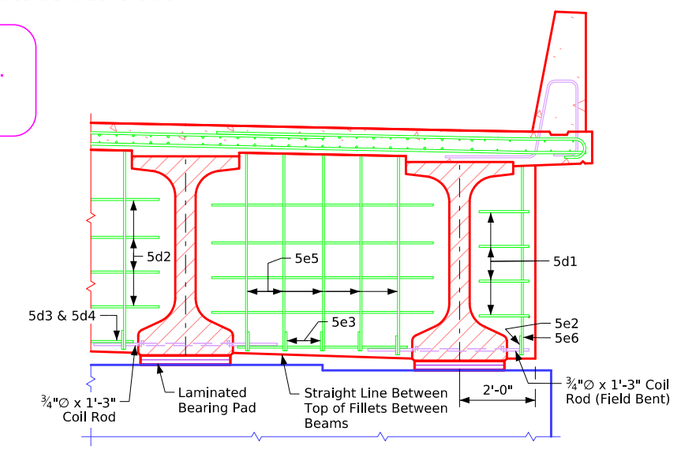

Half Section Near Pier
(Expansion Pier Shown)

Bridge Deck Cross Section

Correction 04-14: Added Concrete Quantity Table & Referral Note to Summary Quantity Sheet. Removed Design Bearing Note for Abut. Piling from Abutment Notes.
Revised 05-2026: In "Drain Details", corrected typo of deck drain radius to R=1'-0" (Typo Was R=2'-0"). In "Half Section Near Pier" details changed Coil Rod to Field Bent (was labeled Bent).
BTIntegralBridges.dgn - 4385-BTE-6 - Issued 02-08. This Sheet Re-Issued 11-2023. Sheet Format Update.

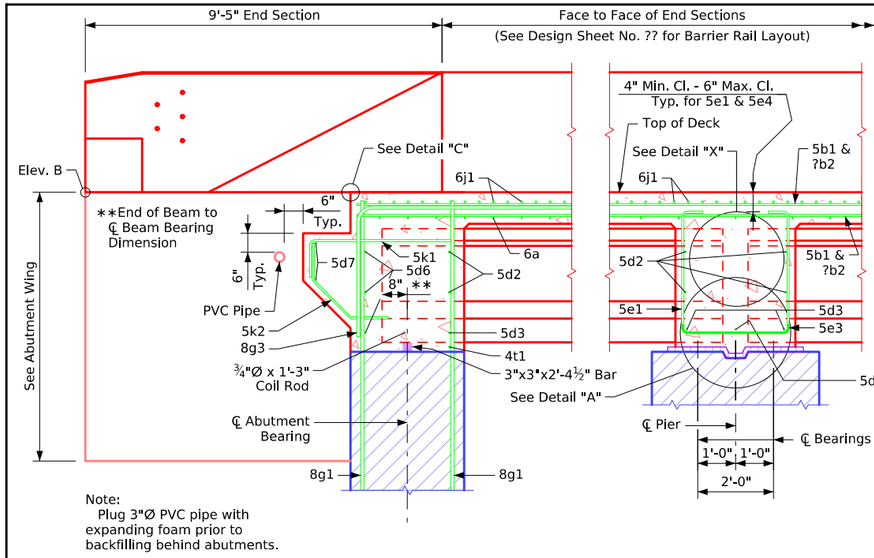

Part Longitudinal Section Near Gutter

(For details of Intermediate Diaphragm see Design Sheet No. ??)

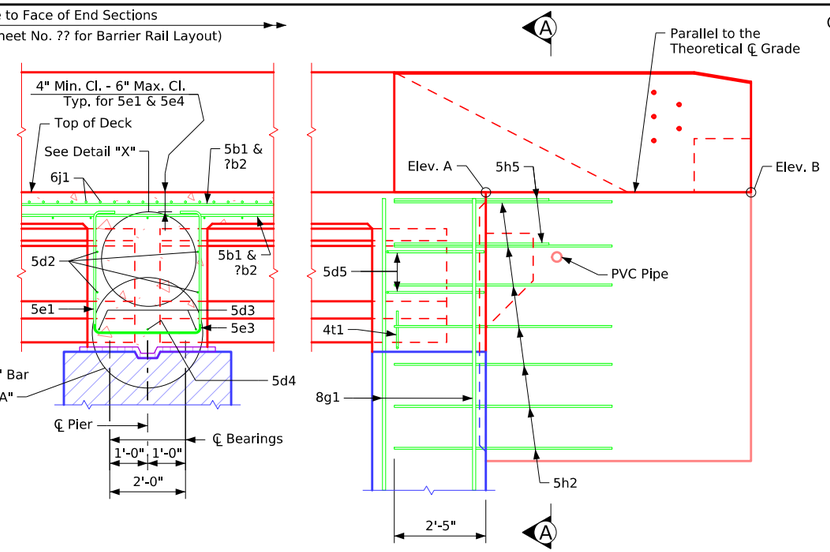

Part End View at Abutment

Control Point:

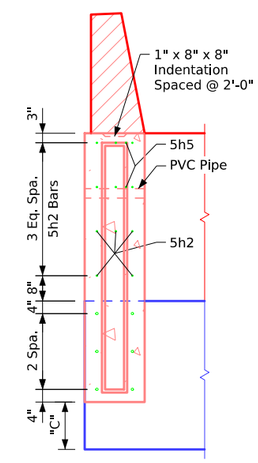

Section A-A

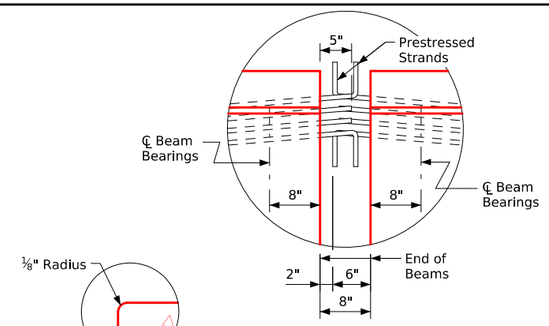

Detail "X"

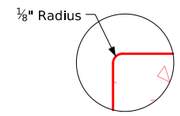

Detail "C"

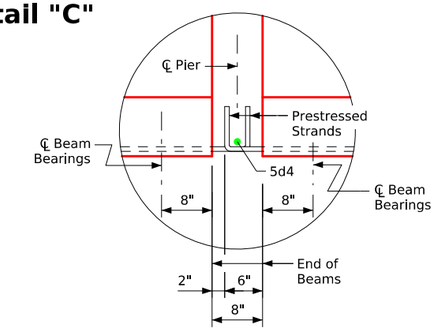

Detail "A"

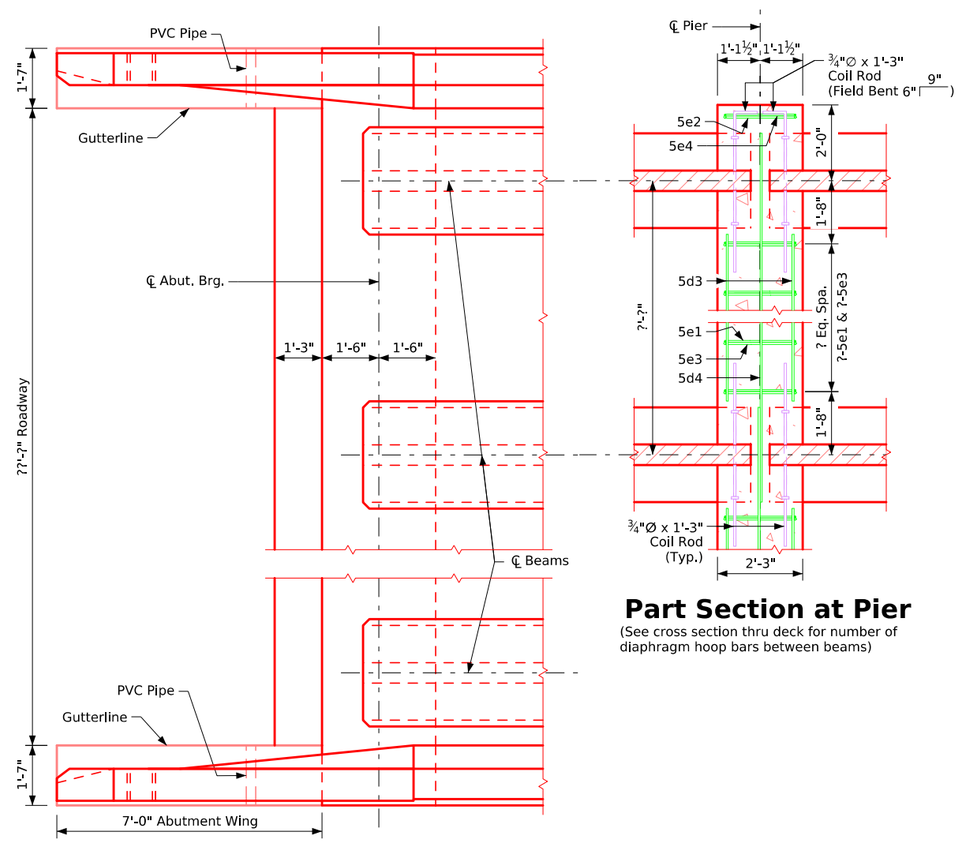

Part Plan

Part Section at Pier

(See cross section thru deck for number of diaphragm hoop bars between beams)

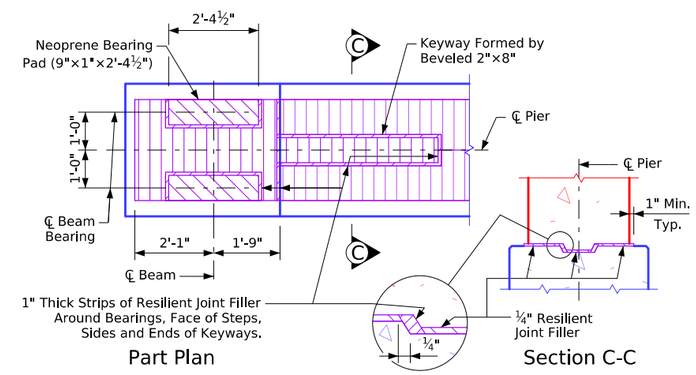

Top of Fixed Pier Details

Table of Wingwall Elevations

Location	Dim "C"	Elev. A	Elev. B
S.W. Corner	?'-?"	???.?	???.?
N.W. Corner	?'-?"	???.?	???.?
S.E. Corner	?'-?"	???.?	???.?
N.E. Corner	?'-?"	???.?	???.?

Abut. & Pier Diaphragm Details

Revised 05-2026: In "Top of Fixed Pier Details", corrected detailing error of missing hatch pattern. Added "Control Point" text. In "Part Section at Pier" details changed Coil Rod to Field Bent (was labeled Bent).
BTIntegralBridges.dgn - 4500-BTB - Issued 02-08. This Sheet Re-Issued 11-2023. Sheet Format Update.

FILE NO.	ENGLISH	DESIGN TEAM	"BTB" Beams - Part Plan & Longitudinal Section - 0 Skew	Standard Sheet 4500-BTB	COUNTY	PROJECT NUMBER	SHEET NUMBER

8:25:44 AM 6/11/2026 bkloss pw:\\NTPwint1.dot.int.lan:PWMain\Documents\Highway\Bridge\Standards\Bridges\BTIntegralBridges.dgn

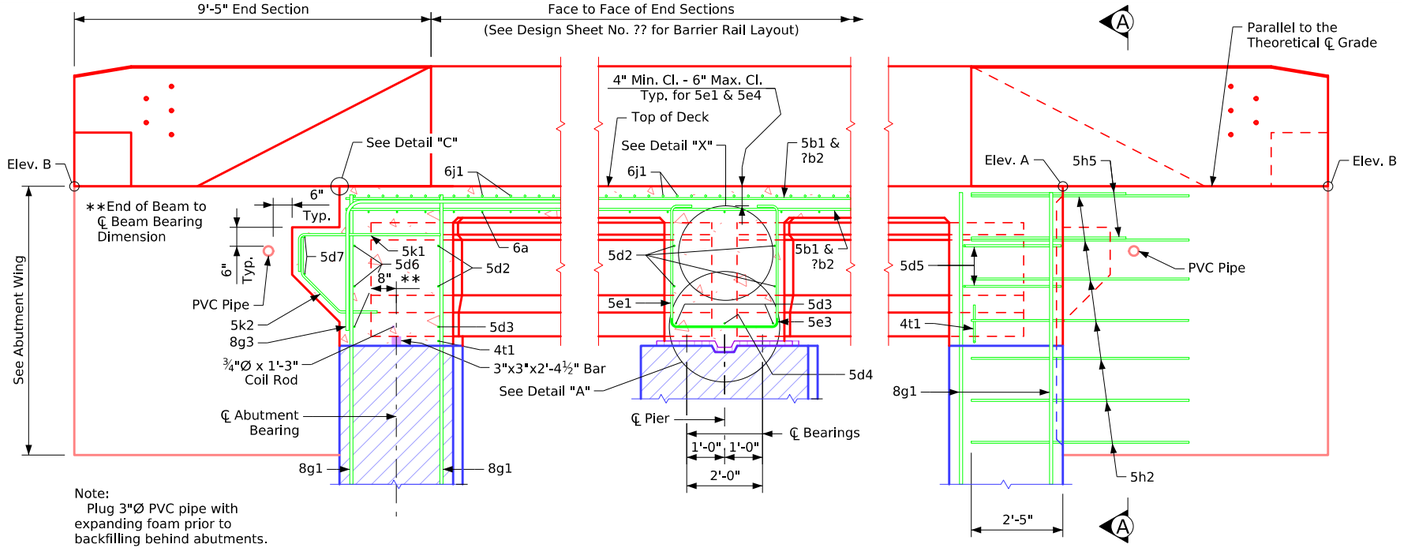

Part Longitudinal Section Near Gutter

(For details of Intermediate Diaphragm see Design Sheet No. ??)

Part End View at Abutment

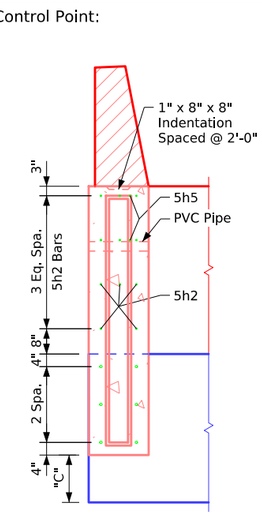

Section A-A

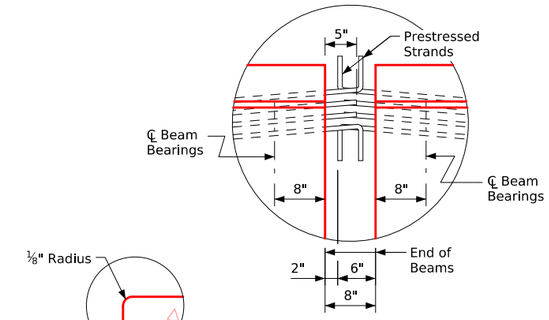

Detail "X"

Detail "C"

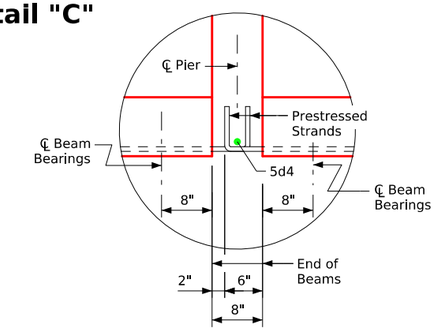

Detail "A"

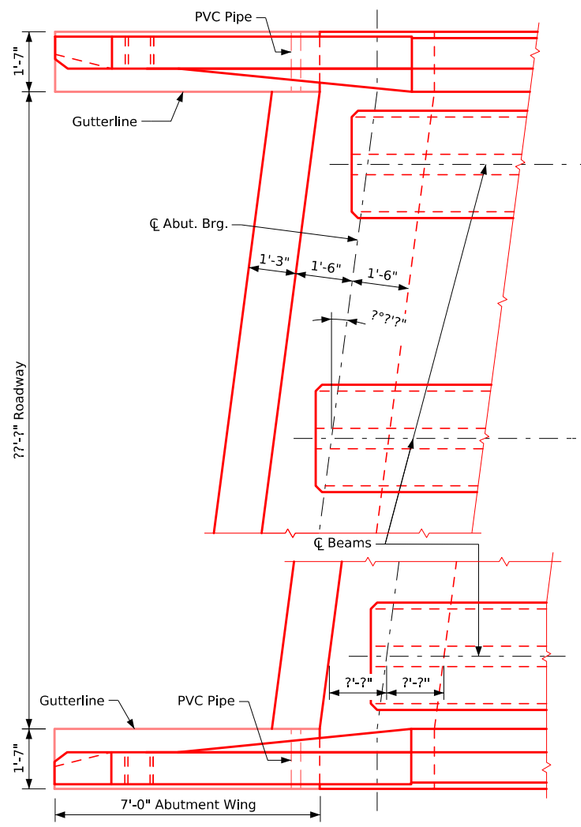

Part Plan

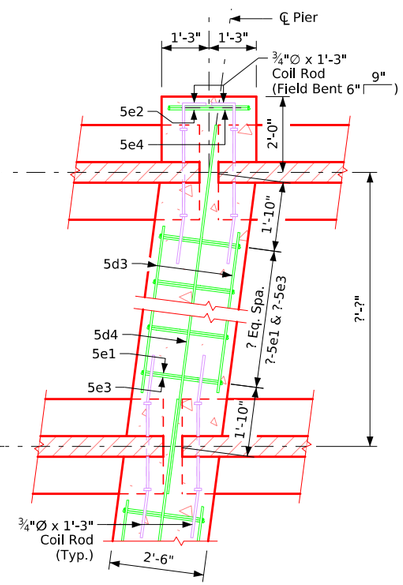

Part Section at Pier

(See cross section thru deck for number of diaphragm hoop bars between beams)

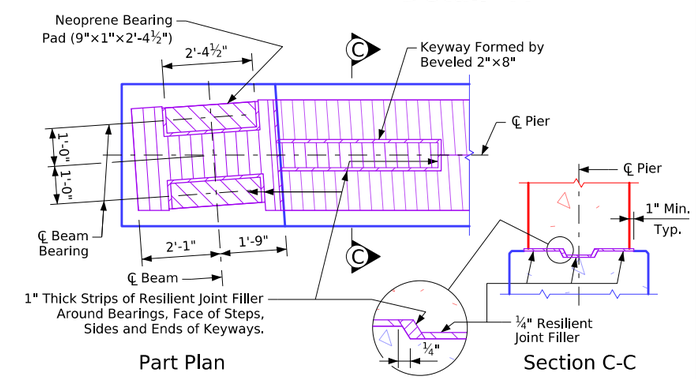

Top of Fixed Pier Details

Table of Wingwall Elevations

Location	Dim "C"	Elev. A	Elev. B
S.W. Corner	?'-?"	???.?	???.?
N.W. Corner	?'-?"	???.?	???.?
S.E. Corner	?'-?"	???.?	???.?
N.E. Corner	?'-?"	???.?	???.?

Abut. & Pier Diaphragm Details

Revised 05-2026; Moved location of "Section A-A" details to align with elevation at top of sheet (was in center of sheet). In "Top of Fixed Pier Details", corrected detailing error of missing hatch pattern. Added "Control Point" text.
In "Part Section at Pier" details changed Coil Rod to Field Bent (was labeled Bent).
BTIntegralBridges.dgn - 4501-BTB - Issued 02-08. This Sheet Re-Issued 11-2023. Sheet Format Update.

FILE NO.	ENGLISH	DESIGN TEAM	"BTB" Beams - Part Plan & Longitudinal Section - (L,A,) 0°01 - 7°30 Skew	Standard Sheet 4501-BTB	COUNTY	PROJECT NUMBER	SHEET NUMBER

8:25:45 AM 6/11/2026 bkloss pw:\\NTPwint1.dot.int.lan:PWMain\Documents\Highway\Bridge\Standards\Bridges\BTIntegralBridges.dgn

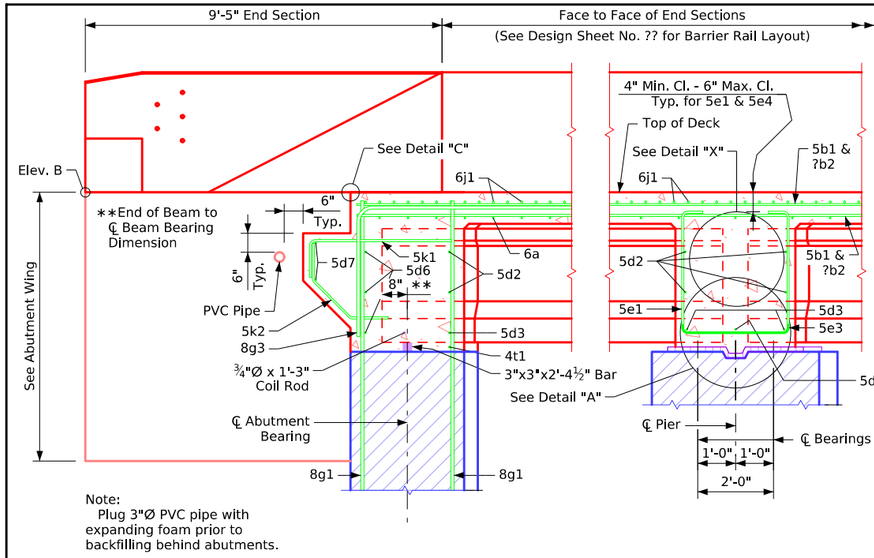

Note:
Plug 3"Ø PVC pipe with expanding foam prior to backfilling behind abutments.

Part Longitudinal Section Near Gutter

(For details of Intermediate Diaphragm see Design Sheet No. ??)

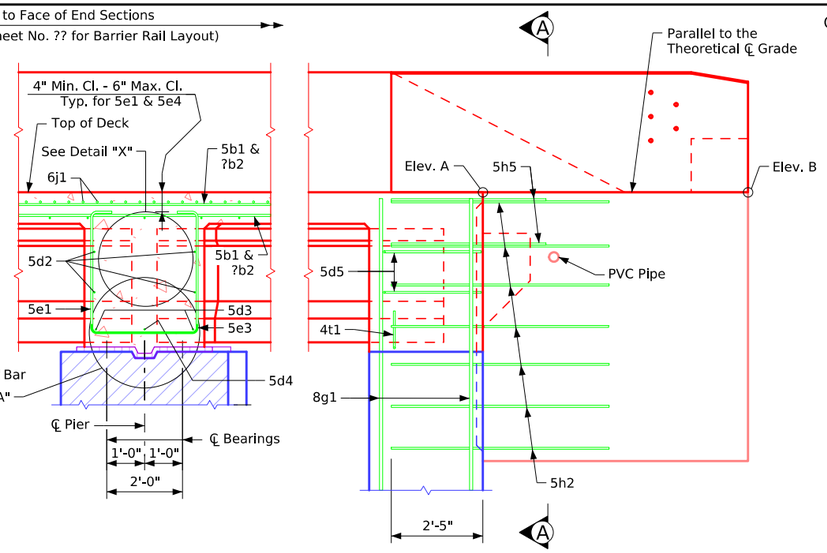

Part End View at Abutment

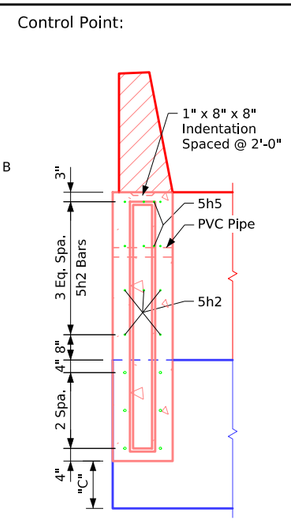

Section A-A

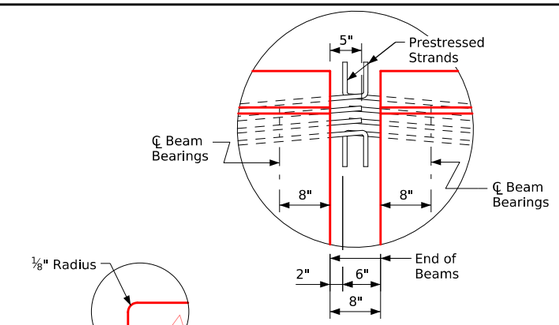

Detail "X"

Detail "C"

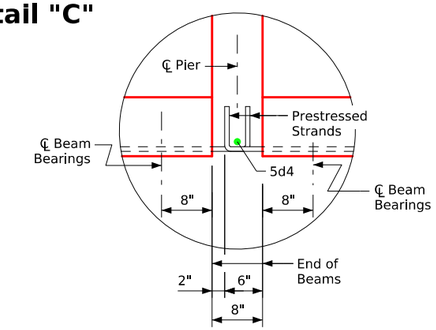

Detail "A"

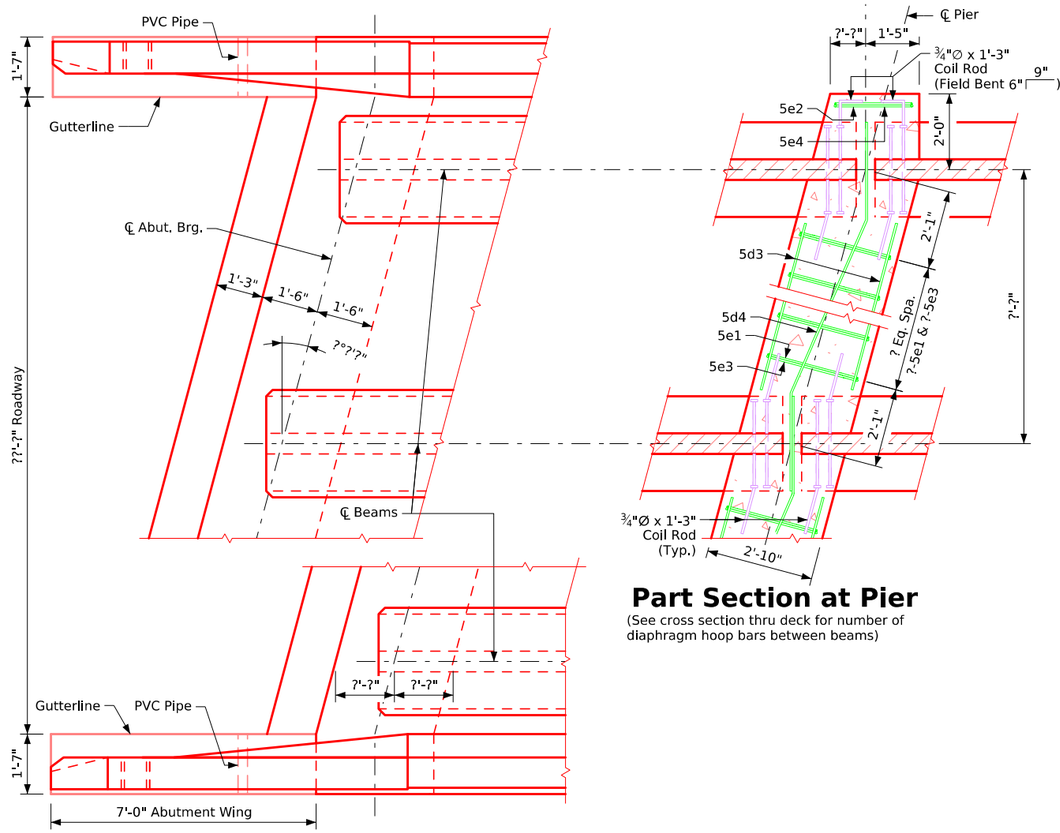

Part Plan

Part Section at Pier

(See cross section thru deck for number of diaphragm hoop bars between beams)

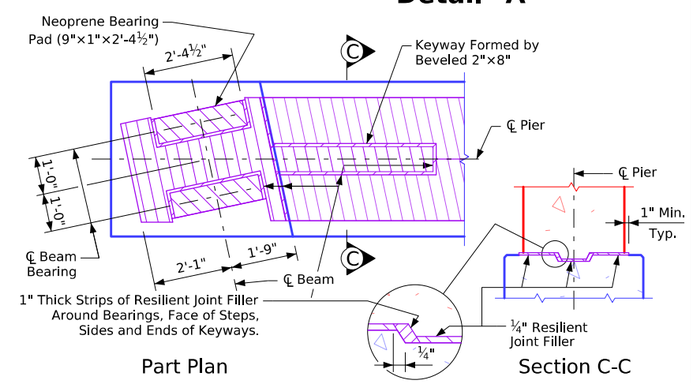

Part Plan

Section C-C

Top of Fixed Pier Details

Table of Wingwall Elevations

Location	Dim "C"	Elev. A	Elev. B
S.W. Corner	?'-?"	???.?	???.?
N.W. Corner	?'-?"	???.?	???.?
S.E. Corner	?'-?"	???.?	???.?
N.E. Corner	?'-?"	???.?	???.?

Abut. & Pier Diaphragm Details

Revised 05-2026: In "Top of Fixed Pier Details", corrected detailing error of missing hatch pattern. Added "Control Point" text. In "Part Section at Pier" details changed Coil Rod to Field Bent (was labeled Bent).
BTIntegralBridges.dgn - 4502-BTB - Issued 02-08. This Sheet Re-Issued 11-2023. Sheet Format Update.

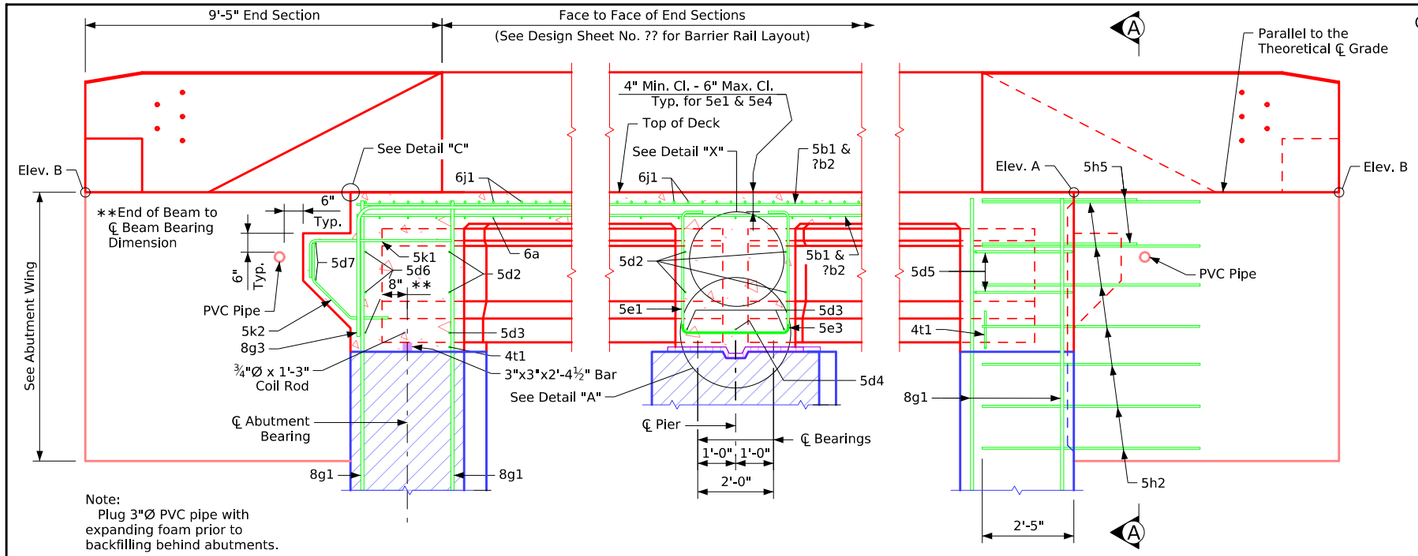

Part Longitudinal Section Near Gutter

(For details of Intermediate Diaphragm see Design Sheet No. ??)

Part End View at Abutment

Control Point:

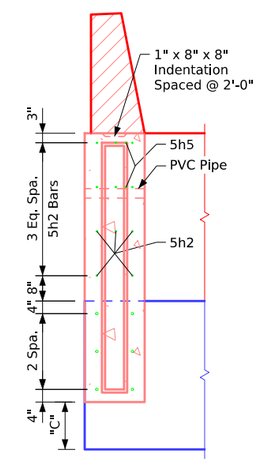

Section A-A

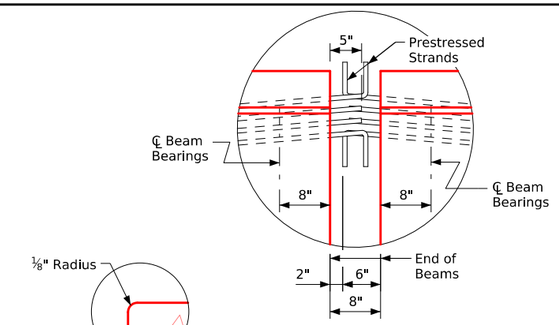

Detail "C"

Detail "X"

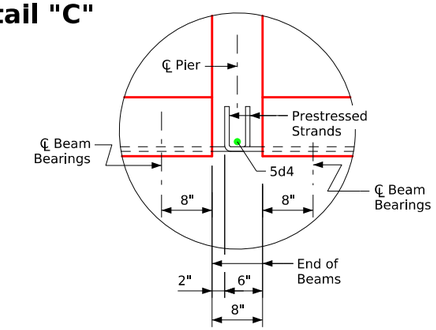

Detail "A"

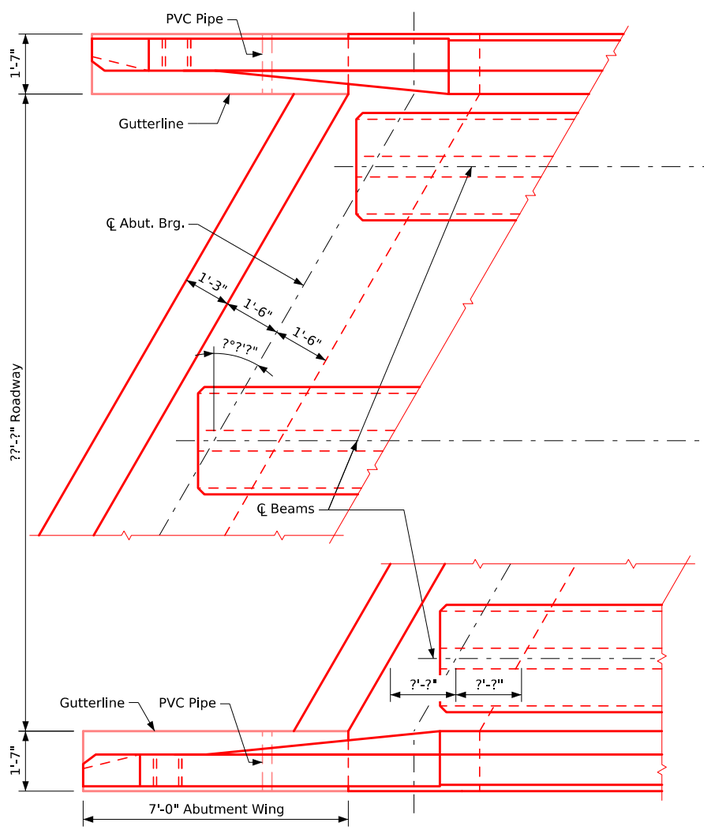

Part Plan

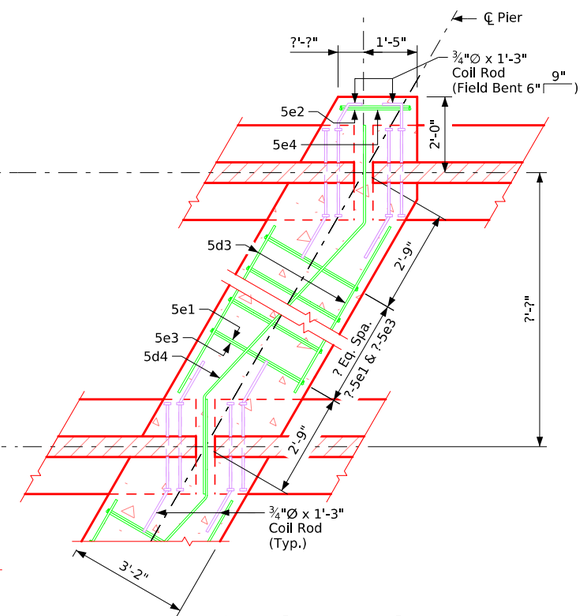

Part Section at Pier

(See cross section thru deck for number of diaphragm hoop bars between beams)

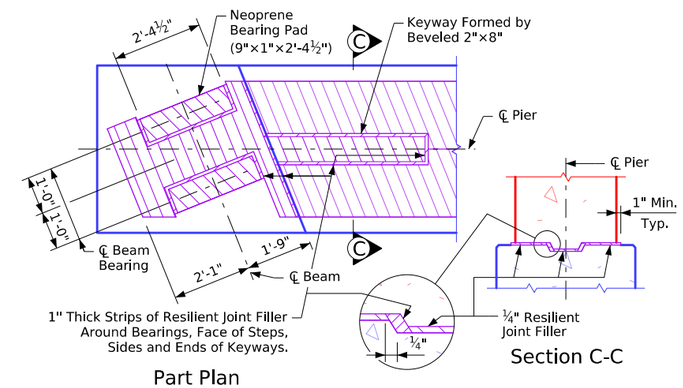

Part Plan

Section C-C

Top of Fixed Pier Details

Table of Wingwall Elevations

Location	Dim "C"	Elev. A	Elev. B
S.W. Corner	?'-?"	???.?	???.?
N.W. Corner	?'-?"	???.?	???.?
S.E. Corner	?'-?"	???.?	???.?
N.E. Corner	?'-?"	???.?	???.?

Abut. & Pier Diaphragm Details

Revised 05-2026: In "Top of Fixed Pier Details", corrected detailing error of missing hatch pattern. Added "Control Point" text. In "Part Section at Pier" details changed Coil Rod to Field Bent (was labeled Bent).
BTIntegralBridges.dgn - 4503-BTB - Issued 02-08. This Sheet Re-Issued 11-2023. Sheet Format Update.

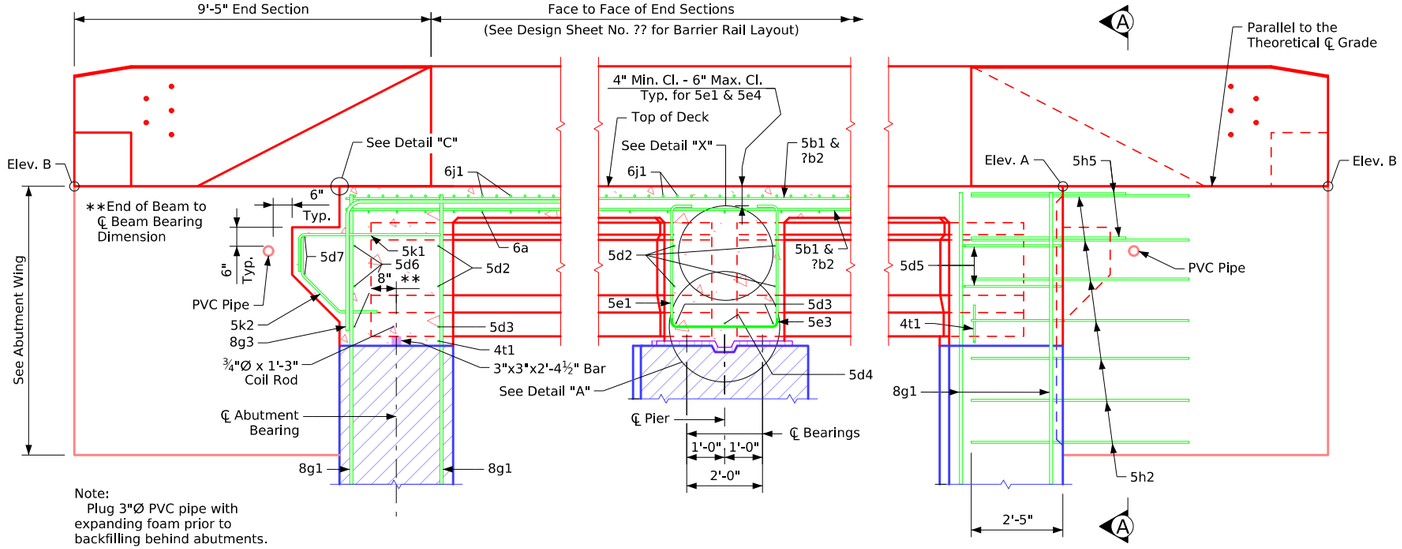

Note:
Plug 3"Ø PVC pipe with expanding foam prior to backfilling behind abutments.

Part Longitudinal Section Near Gutter

(For details of Intermediate Diaphragm see Design Sheet No. ??)

Part End View at Abutment

Control Point:

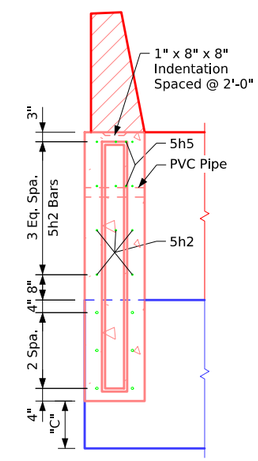

Section A-A

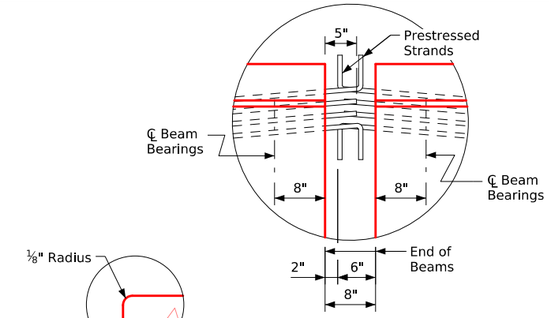

Detail "C"

Detail "X"

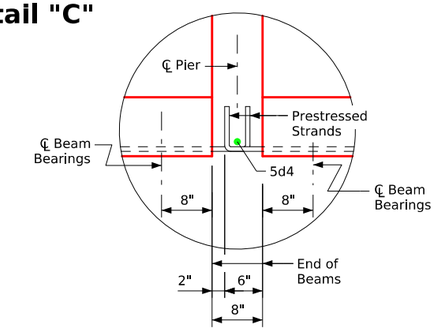

Detail "A"

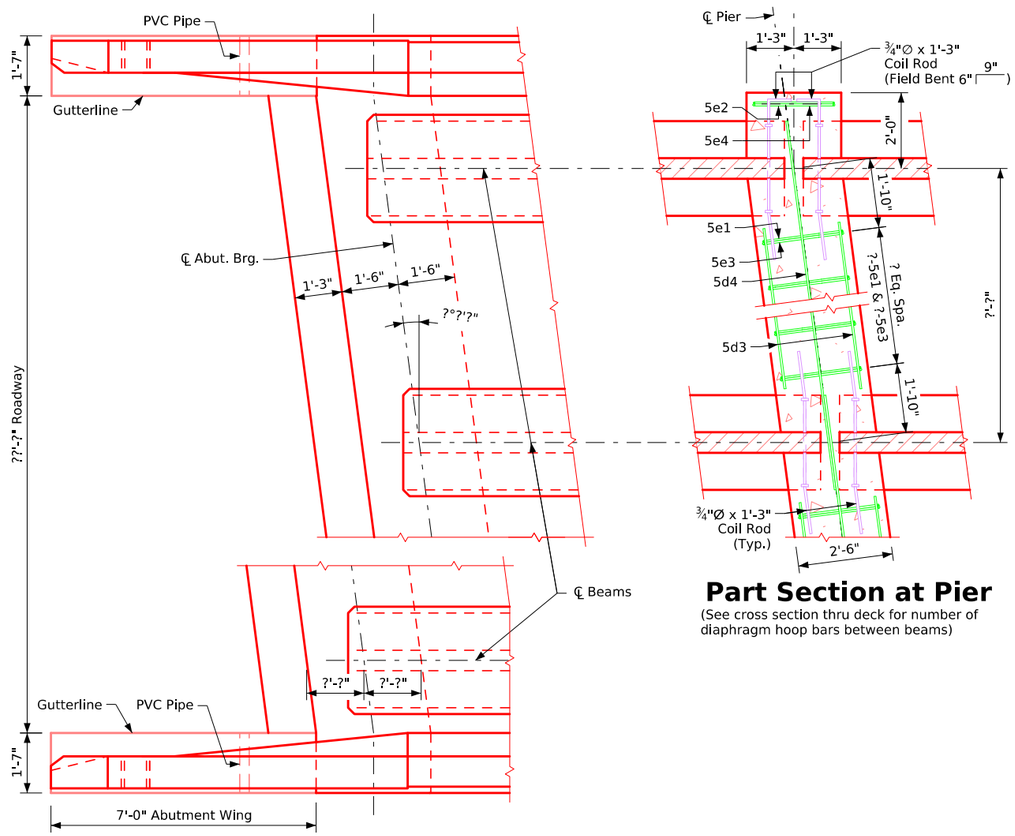

Part Plan

Part Section at Pier

(See cross section thru deck for number of diaphragm hoop bars between beams)

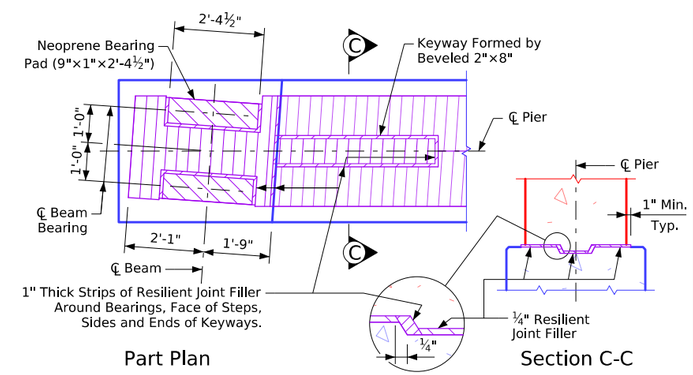

Top of Fixed Pier Details

Table of Wingwall Elevations

Location	Dim "C"	Elev. A	Elev. B
S.W. Corner	?'-?"	???.?	???.?
N.W. Corner	?'-?"	???.?	???.?
S.E. Corner	?'-?"	???.?	???.?
N.E. Corner	?'-?"	???.?	???.?

Abut. & Pier Diaphragm Details

Revised 05-2026: In "Top of Fixed Pier Details", corrected detailing error of missing hatch pattern. Added "Control Point" text. In "Part Section at Pier" details changed Coil Rod to Field Bent (was labeled Bent).
BTIntegralBridges.dgn - 4504-BTB - Issued 02-08. This Sheet Re-Issued 11-2023. Sheet Format Update.

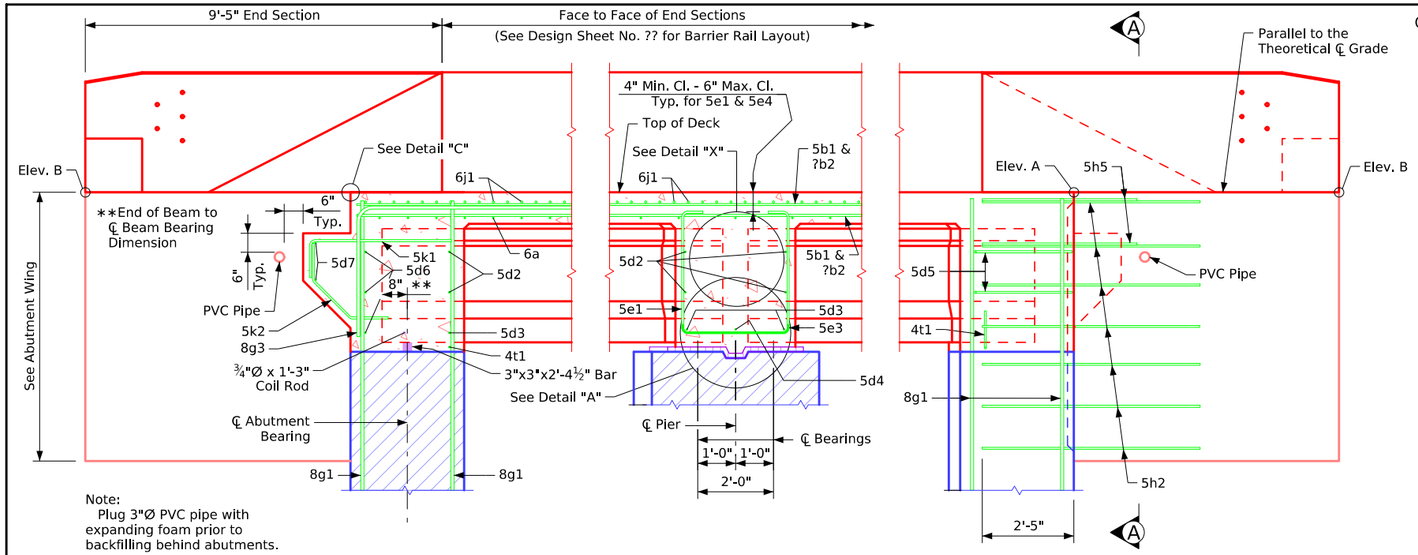

Part Longitudinal Section Near Gutter

(For details of Intermediate Diaphragm see Design Sheet No. ??)

Part End View at Abutment

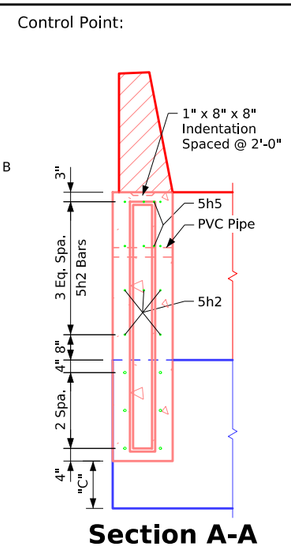

Section A-A

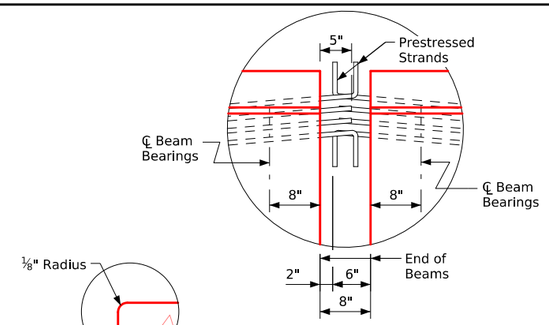

Detail "X"

Detail "C"

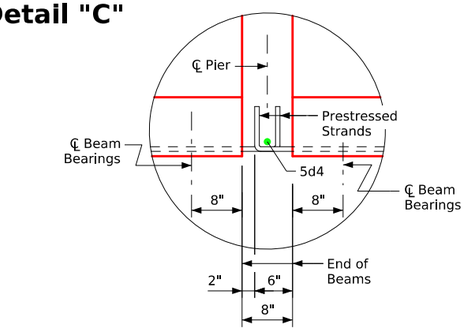

Detail "A"

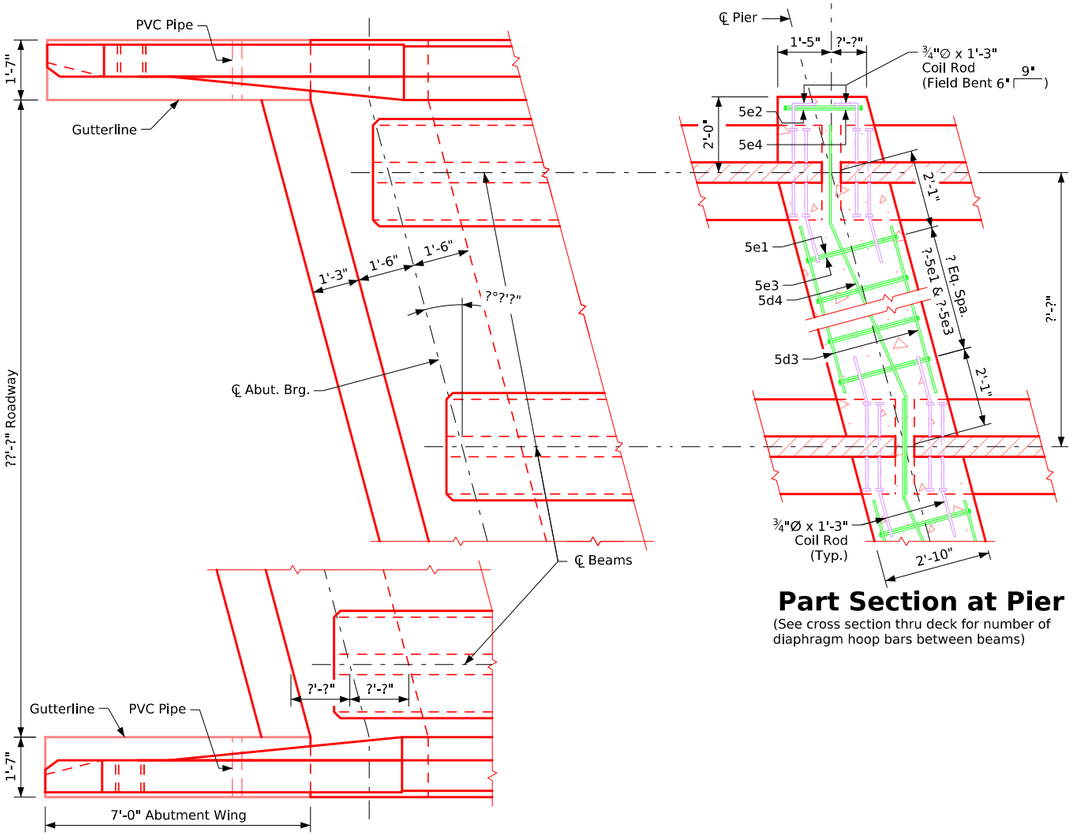

Part Plan

Part Section at Pier

(See cross section thru deck for number of diaphragm hoop bars between beams)

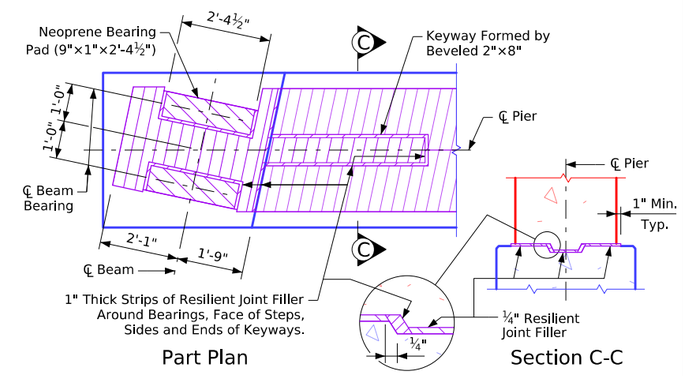

Top of Fixed Pier Details

Table of Wingwall Elevations

Location	Dim "C"	Elev. A	Elev. B
S.W. Corner	?'-?"	???.?	???.?
N.W. Corner	?'-?"	???.?	???.?
S.E. Corner	?'-?"	???.?	???.?
N.E. Corner	?'-?"	???.?	???.?

Abut. & Pier Diaphragm Details

Revised 05-2026: In "Top of Fixed Pier Details", corrected detailing error of missing hatch pattern. Added "Control Point" text. In "Part Section at Pier" details changed Coil Rod to Field Bent (was labeled Bent).
BTIntegralBridges.dgn - 4505-BTB - Issued 02-08. This Sheet Re-Issued 11-2023. Sheet Format Update.

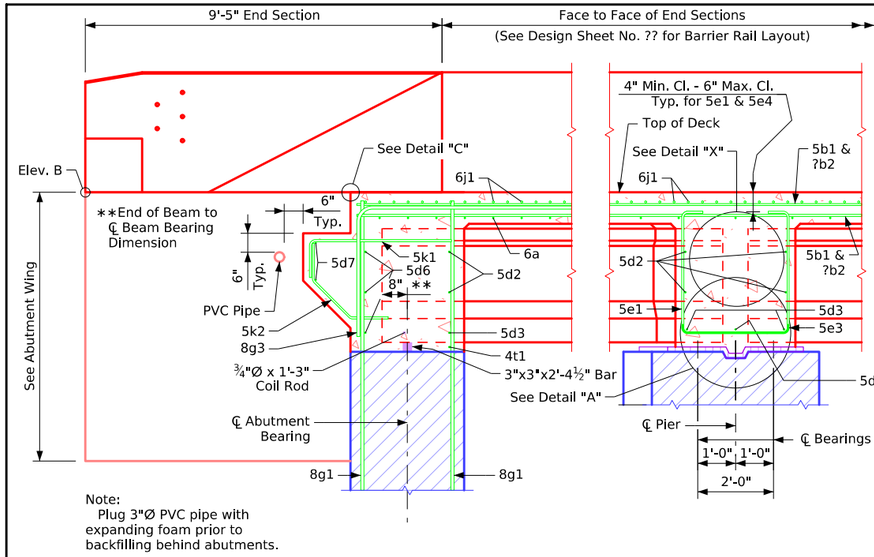

Note:
Plug 3"Ø PVC pipe with expanding foam prior to backfilling behind abutments.

Part Longitudinal Section Near Gutter

(For details of Intermediate Diaphragm see Design Sheet No. ??)

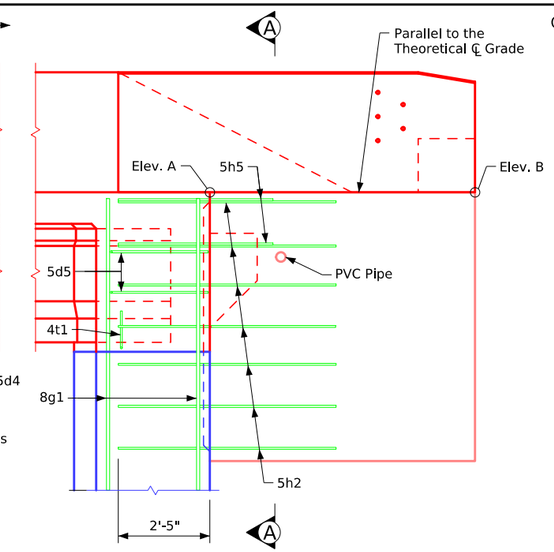

Part End View at Abutment

Control Point:

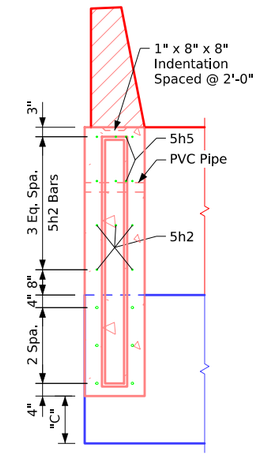

Section A-A

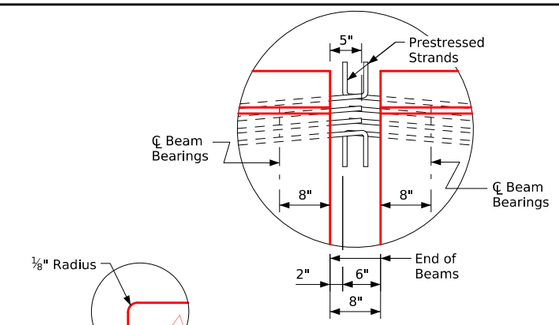

Detail "X"

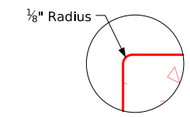

Detail "C"

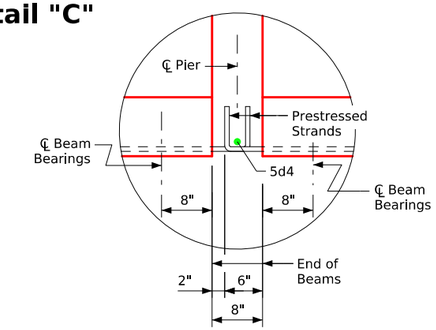

Detail "A"

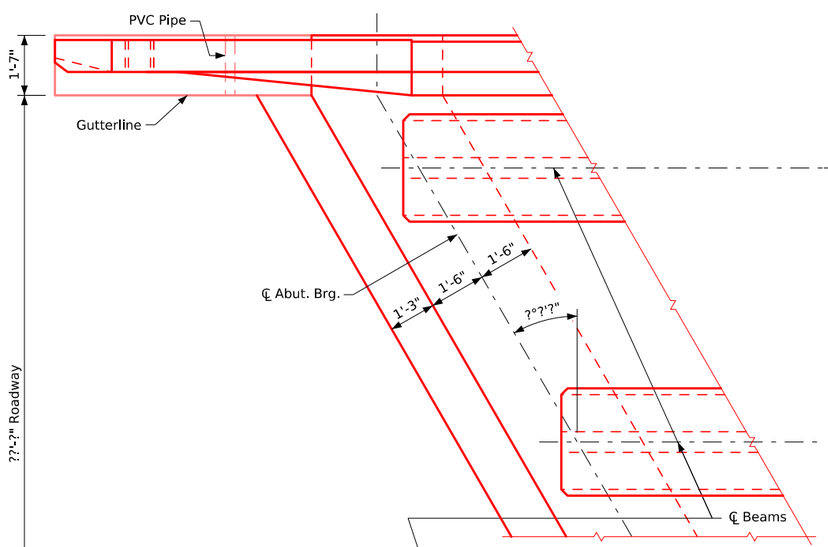

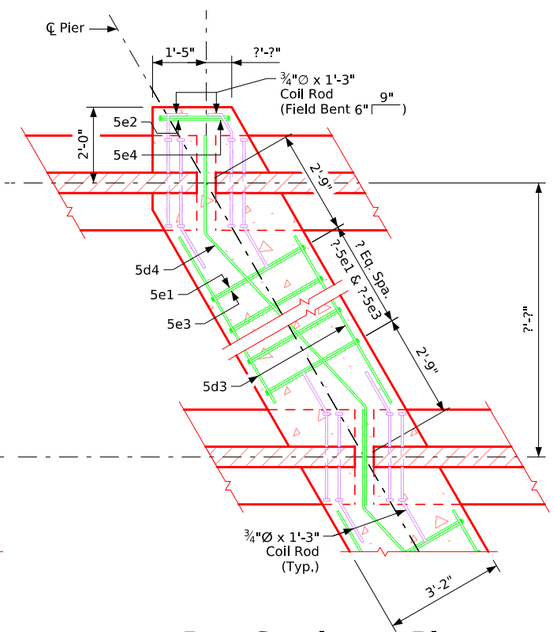

Part Section at Pier

(See cross section thru deck for number of diaphragm hoop bars between beams)

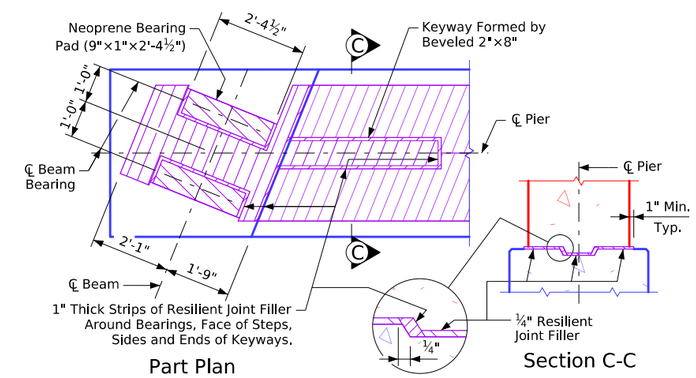

Top of Fixed Pier Details

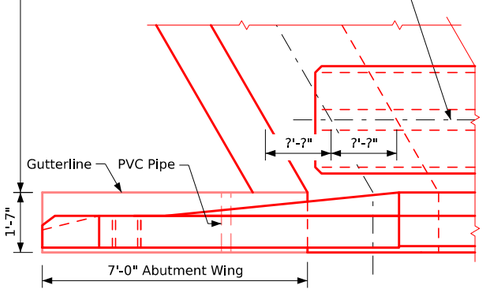

Part Plan

Table of Wingwall Elevations

Location	Dim "C"	Elev. A	Elev. B
S.W. Corner	?'-?"	???.?	???.?
N.W. Corner	?'-?"	???.?	???.?
S.E. Corner	?'-?"	???.?	???.?
N.E. Corner	?'-?"	???.?	???.?

Abut. & Pier Diaphragm Details

Revised 05-2026: In "Top of Fixed Pier Details", corrected detailing error of missing hatch pattern. Added "Control Point" text. In "Part Section at Pier" details changed Coil Rod to Field Bent (was labeled Bent).
BTIntegralBridges.dgn - 4506-BTB - Issued 02-08. This Sheet Re-Issued 11-2023. Sheet Format Update.

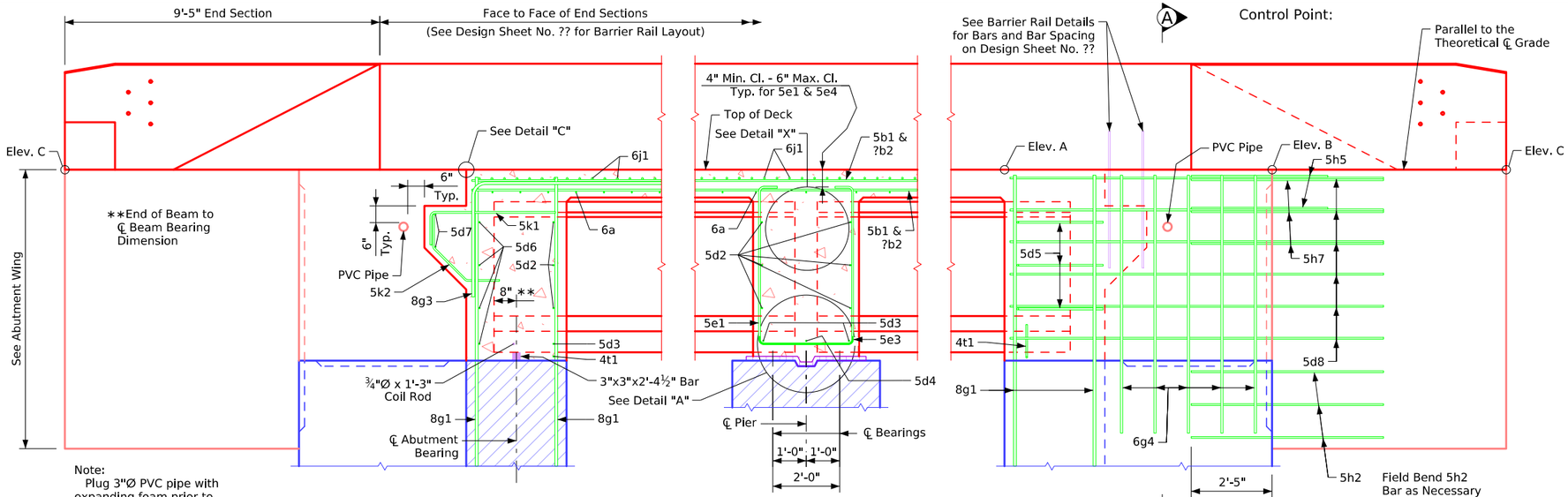

Note:
Plug 3"Ø PVC pipe with expanding foam prior to backfilling behind abutments.

Part Longitudinal Section Near Gutter

(For details of Intermediate Diaphragm see Design Sheet No. ??)

Part End View at Abutment

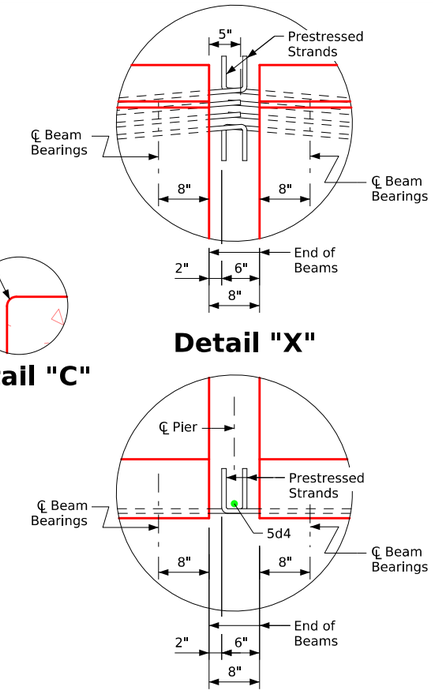

Detail "C"

Detail "X"

Detail "A"

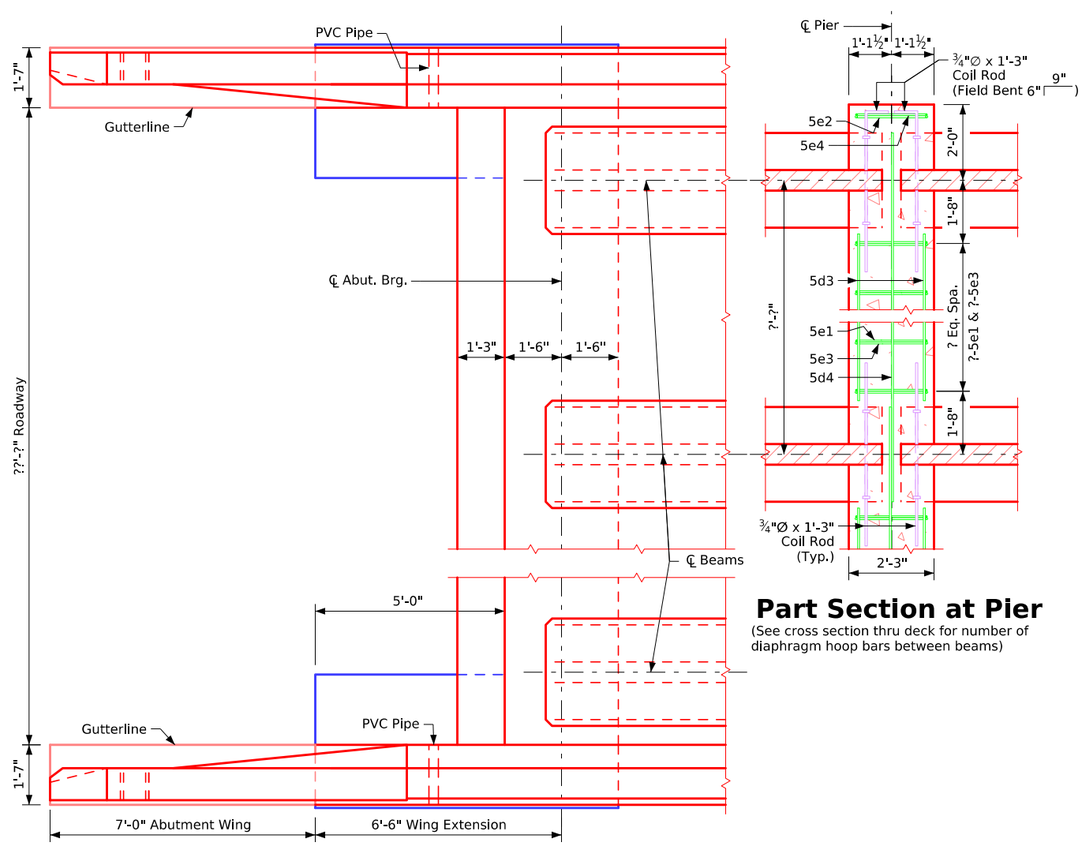

Part Plan

Part Section at Pier

(See cross section thru deck for number of diaphragm hoop bars between beams)

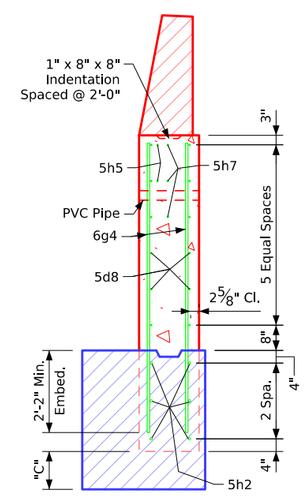

Section A-A

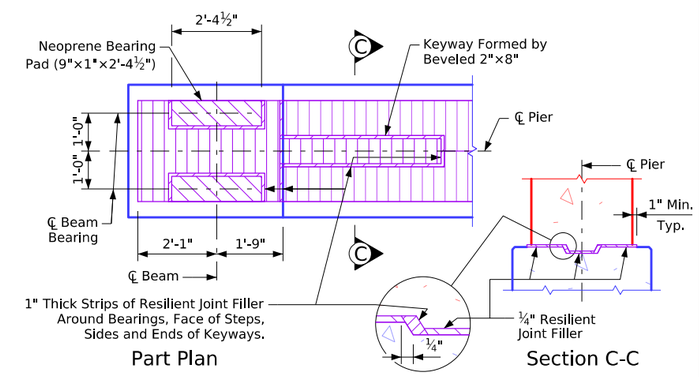

Top of Fixed Pier Details

Table of Wingwall Elevations

Location	Dim "C"	Elev. A	Elev. B	Elev. C
S.W. Corner	?'-?"	???.??	???.??	???.??
N.W. Corner	?'-?"	???.??	???.??	???.??
S.E. Corner	?'-?"	???.??	???.??	???.??
N.E. Corner	?'-?"	???.??	???.??	???.??

Abut. & Pier Diaphragm Details

Revised 01-2012: Added Field Bend 5h4 Bar to Avoid Pile in Abutment Wing Note.
Revised 05-2026: In "Section A-A", flipped/switched orientation of horizontal and vertical bars in outside face of wingwall. In "Top of Fixed Pier Details", corrected detailing error of missing hatch pattern. Added "Control Point" text. In "Part Section at Pier" details changed Coil Rod to Field Bent (was labeled Bent).
BTIntegralBridges.dgn - 4507-BTB - Issued 02-08. This Sheet Re-Issued 11-2023. Sheet Format Update.

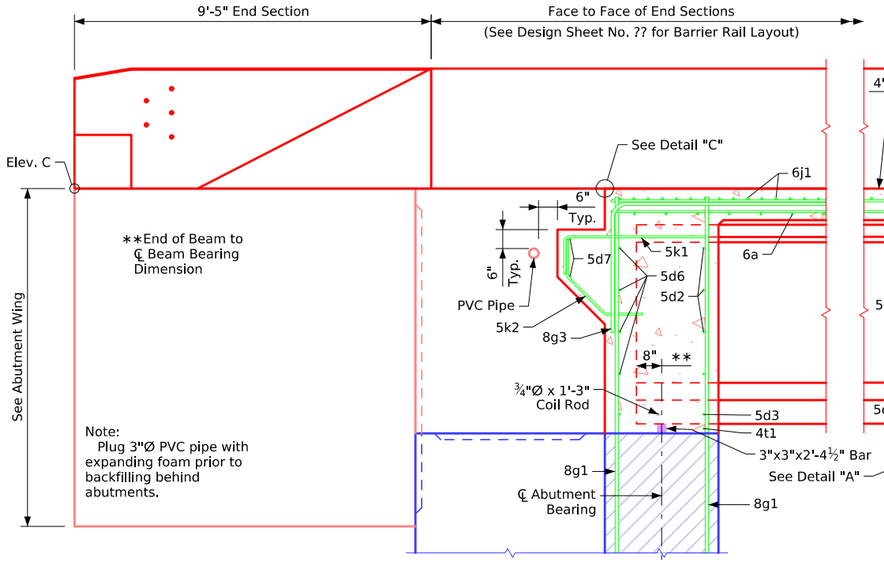

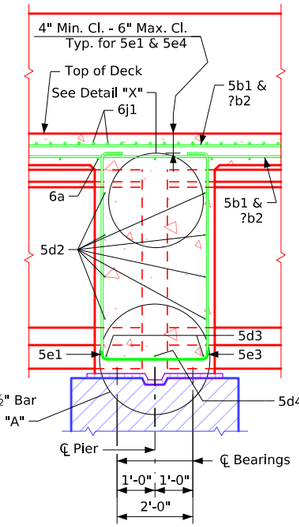

Part Longitudinal Section Near Gutter

(For details of Intermediate Diaphragm see Design Sheet No. ??)

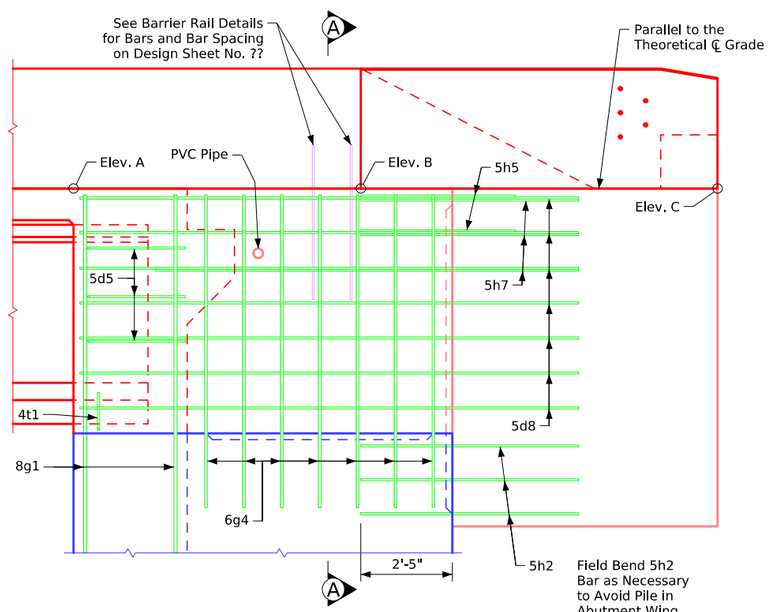

Part End View at Abutment

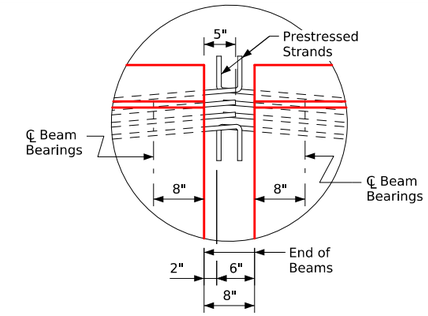

Detail "X"

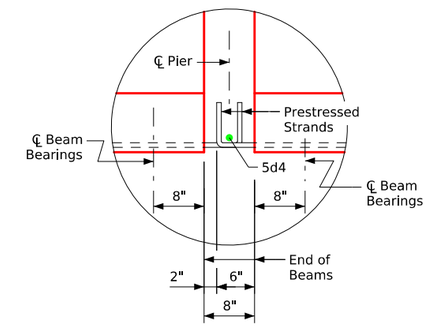

Detail "A"

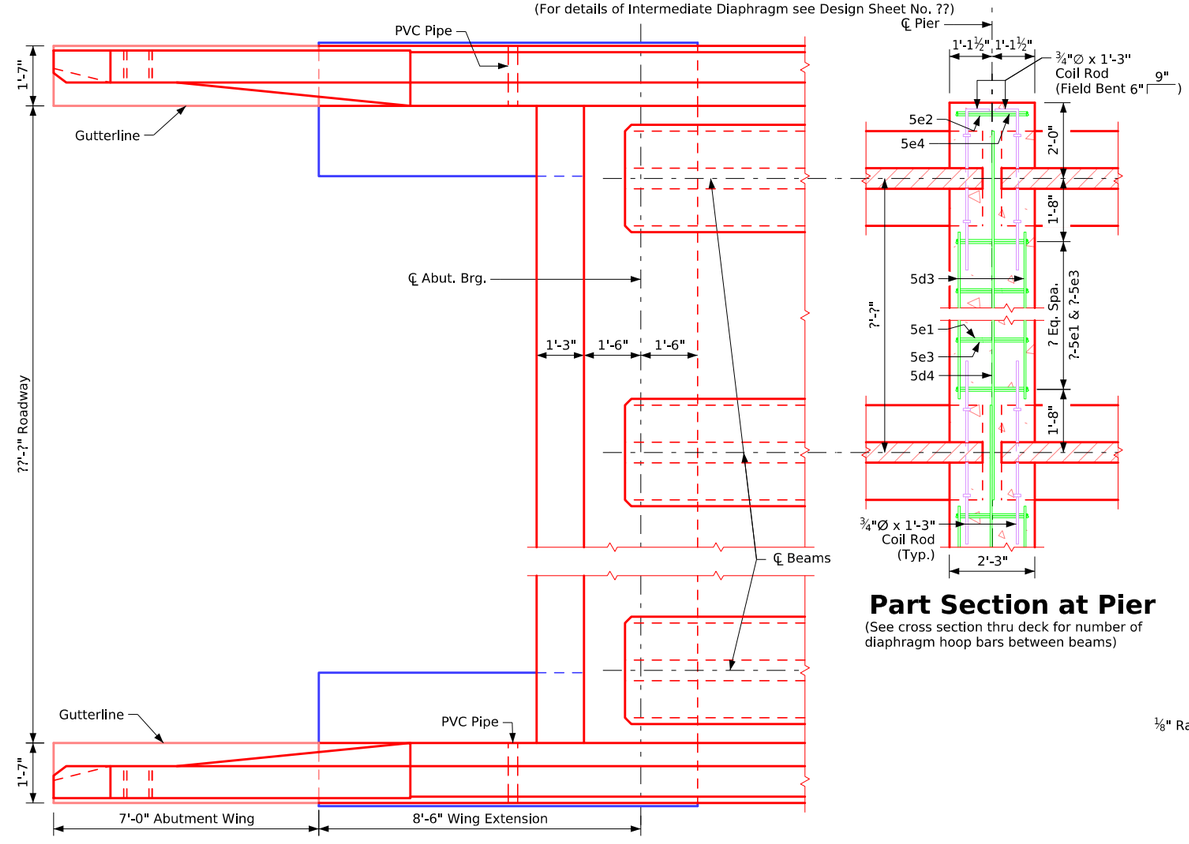

Part Plan

Part Section at Pier

(See cross section thru deck for number of diaphragm hoop bars between beams)

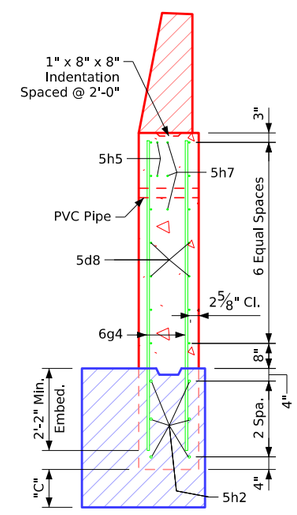

Section A-A

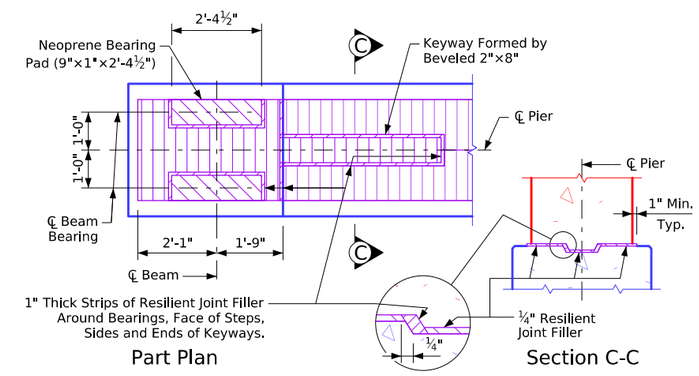

Top of Fixed Pier Details

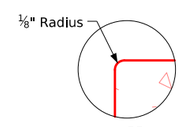

Detail "C"

Table of Wingwall Elevations

Location	Dim "C"	Elev. A	Elev. B	Elev. C
S.W. Corner	?'-?"	???.??	???.??	???.??
N.W. Corner	?'-?"	???.??	???.??	???.??
S.E. Corner	?'-?"	???.??	???.??	???.??
N.E. Corner	?'-?"	???.??	???.??	???.??

Abut. & Pier Diaphragm Details

Revised 01-12: Added Field Bend 5h4 Bar to Avoid Pile in Abutment Wing Note.
Revised 05-2026: In "Section A-A", flipped/switched orientation of horizontal and vertical bars in outside face of wingwall. In "Top of Fixed Pier Details", corrected detailing error of missing hatch pattern. Added "Control Point" text.
In "Part Section at Pier" details changed Coil Rod to Field Bent (was labeled Bent).
BTIntegralBridges.dgn - 4507-BTB - Issued 02-08. This Sheet Re-Issued 11-2023. Sheet Format Update.

FILE NO.	ENGLISH	DESIGN TEAM	"BTE" Beams - Part Plan & Longitudinal Section - 0 Skew	Standard Sheet 4507-BTE	COUNTY	PROJECT NUMBER	SHEET NUMBER

8:25:49 AM 6/11/2026 bkloss pw:\\NTPwint1.dot.int.lan:PWMain\Documents\Highway\Bridge\Standards\Bridges\BTIntegralBridges.dgn

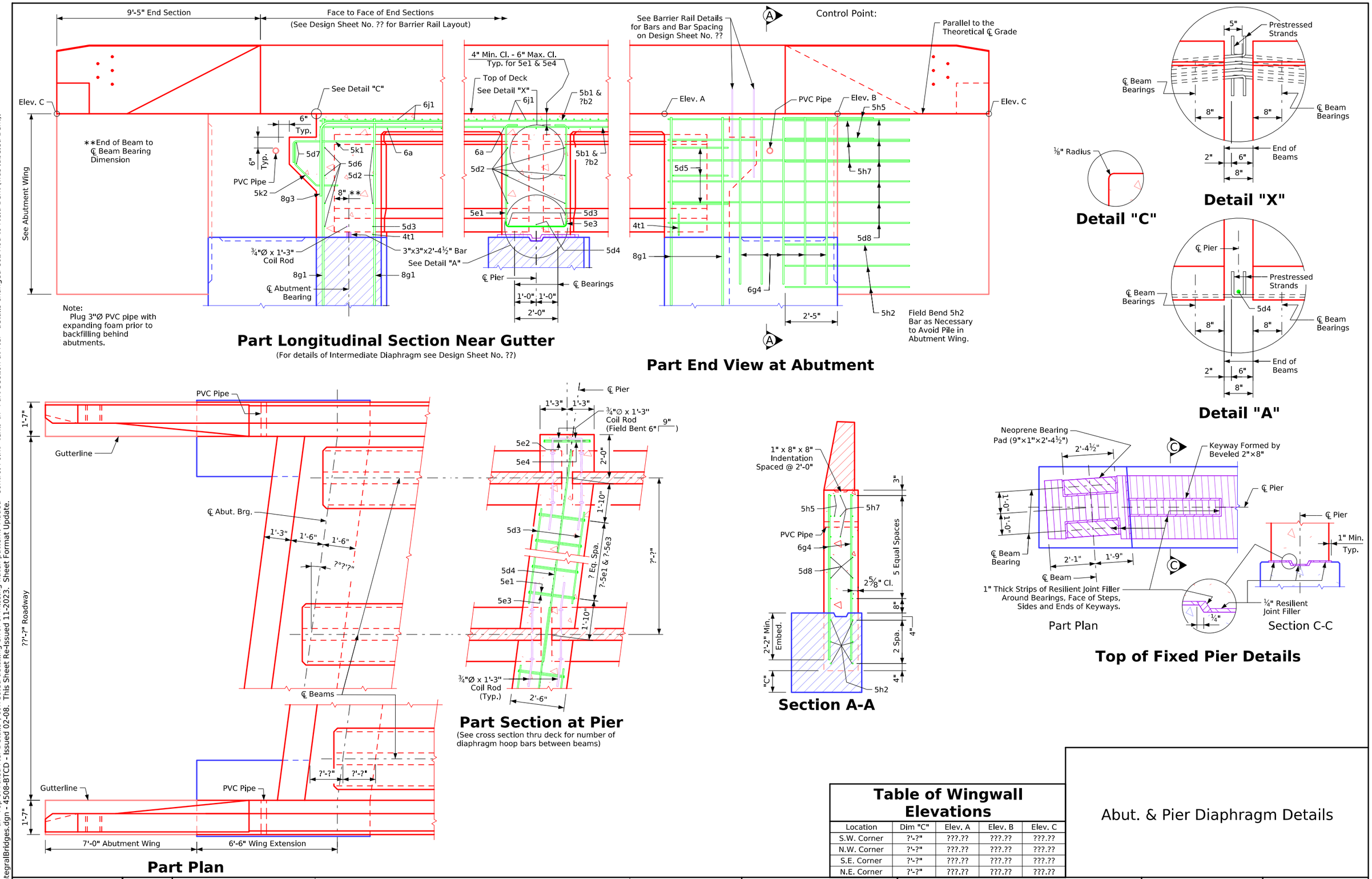

Table of Wingwall Elevations

Location	Dim "C"	Elev. A	Elev. B	Elev. C
S.W. Corner	?'-?"	???.??	???.??	???.??
N.W. Corner	?'-?"	???.??	???.??	???.??
S.E. Corner	?'-?"	???.??	???.??	???.??
N.E. Corner	?'-?"	???.??	???.??	???.??

Abut. & Pier Diaphragm Details

Revised 01-12: Added Field Bend 5h4 Bar To Avoid Pile In Abutment Wing Note.
Revised 05-2026: Moved location of Detail "C" to upper right of sheet (was in lower center of sheet). In "Section A-A", flipped/switched orientation of horizontal and vertical bars in outside face of wingwall. In "Top of Fixed Pier Details", corrected detailing error of missing hatch pattern. Added "Control Point" text. In "Part Section at Pier" details changed Coil Rod to Field Bent (was labeled Bent).
BTIntegralBridges.dgn - 4508-BTCD - Issued 02-08. This Sheet Re-Issued 11-2023. Sheet Format Update.

FILE NO.	ENGLISH	DESIGN TEAM	"BTC" or "BTD" Beams - Part Plan & Longitudinal Section - (L.A.) 0°01 - 7°30 Skew	Standard Sheet 4508-BTCD	COUNTY	PROJECT NUMBER	SHEET NUMBER

8:25:49 AM 6/11/2026 bkloss pw:\\NTPwint1.dot.int.lan:PWMain\Documents\Highway\Bridge\Standards\Bridges\BTIntegralBridges.dgn

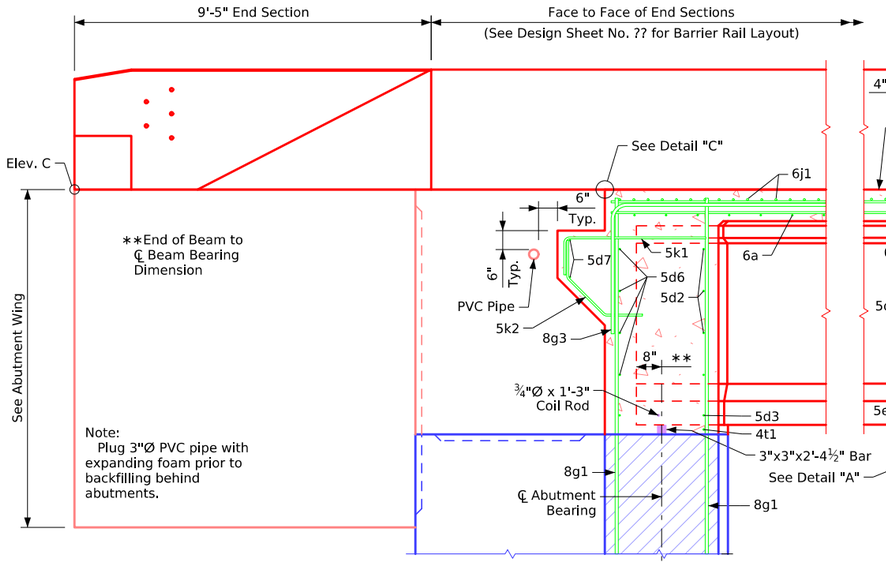

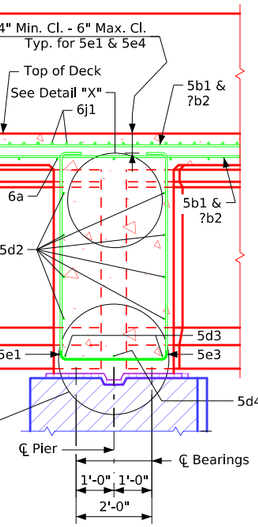

Part Longitudinal Section Near Gutter

(For details of Intermediate Diaphragm see Design Sheet No. ??)

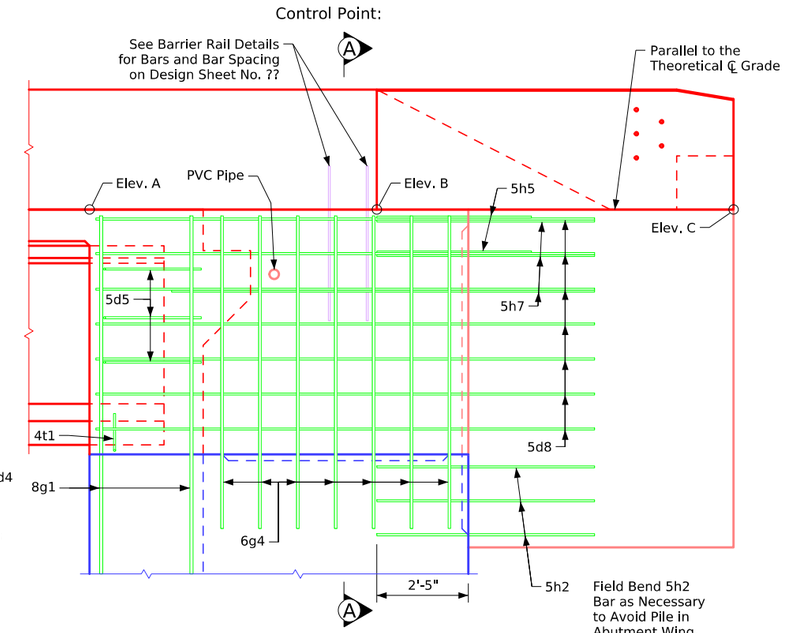

Part End View at Abutment

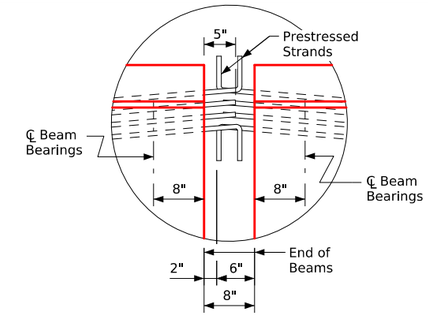

Detail "X"

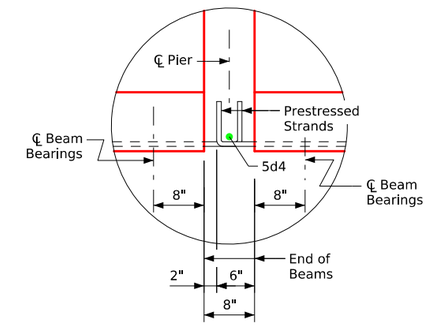

Detail "A"

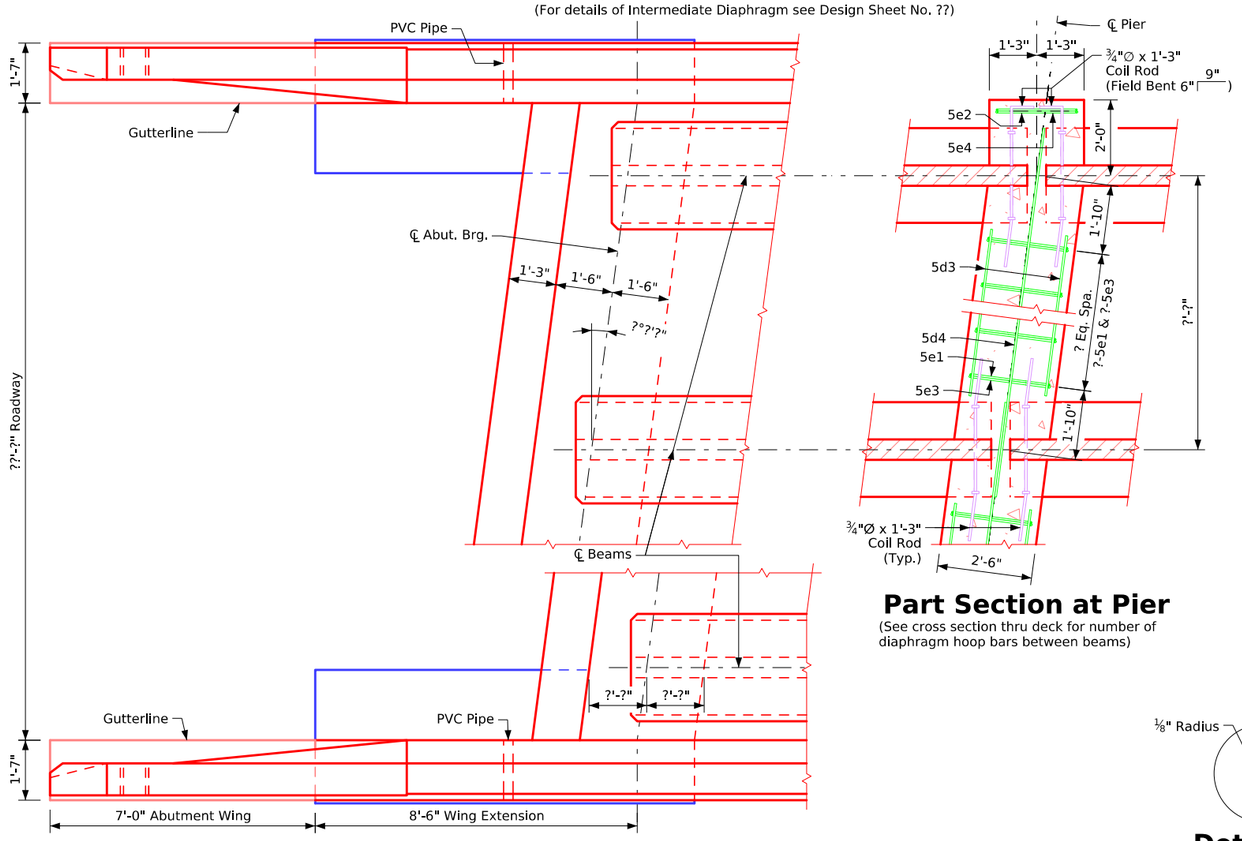

Part Plan

Part Section at Pier

(See cross section thru deck for number of diaphragm hoop bars between beams)

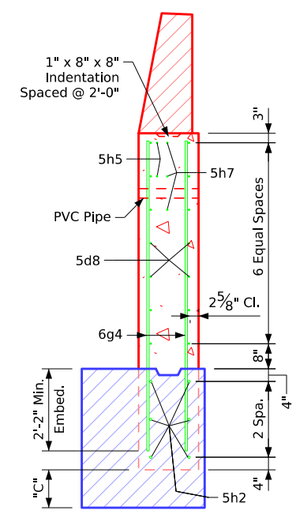

Section A-A

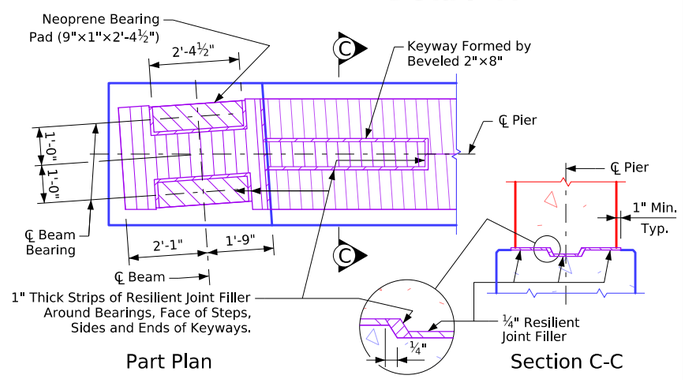

Top of Fixed Pier Details

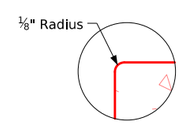

Detail "C"

Table of Wingwall Elevations

Location	Dim "C"	Elev. A	Elev. B	Elev. C
S.W. Corner	?'-?"	???.??	???.??	???.??
N.W. Corner	?'-?"	???.??	???.??	???.??
S.E. Corner	?'-?"	???.??	???.??	???.??
N.E. Corner	?'-?"	???.??	???.??	???.??

Abut. & Pier Diaphragm Details

Revised 01-12: Added Field Bend 5h4 Bar to Avoid Pile in Abutment Wing Note.
Revised 05-2026: In "Section A-A", flipped/switched orientation of horizontal and vertical bars in outside face of wingwall. In "Top of Fixed Pier Details", corrected detailing error of missing hatch pattern. Added "Control Point" text.
In "Part Section at Pier" details changed Coil Rod to Field Bent (was labeled Bent).
BTIntegralBridges.dgn - 4508-BTE - Issued 02-08. This Sheet Re-Issued 11-2023. Sheet Format Update.

FILE NO.	ENGLISH	DESIGN TEAM	"BTE" Beams - Part Plan & Longitudinal Section - (L.A.) 0°01 - 7°30 Skew	Standard Sheet 4508-BTE	COUNTY	PROJECT NUMBER	SHEET NUMBER

8:25:50 AM 6/11/2026 bkloss pw:\\NTPwint1.dot.int.lan:PWMain\Documents\Highway\Bridge\Standards\Bridges\BTIntegralBridges.dgn

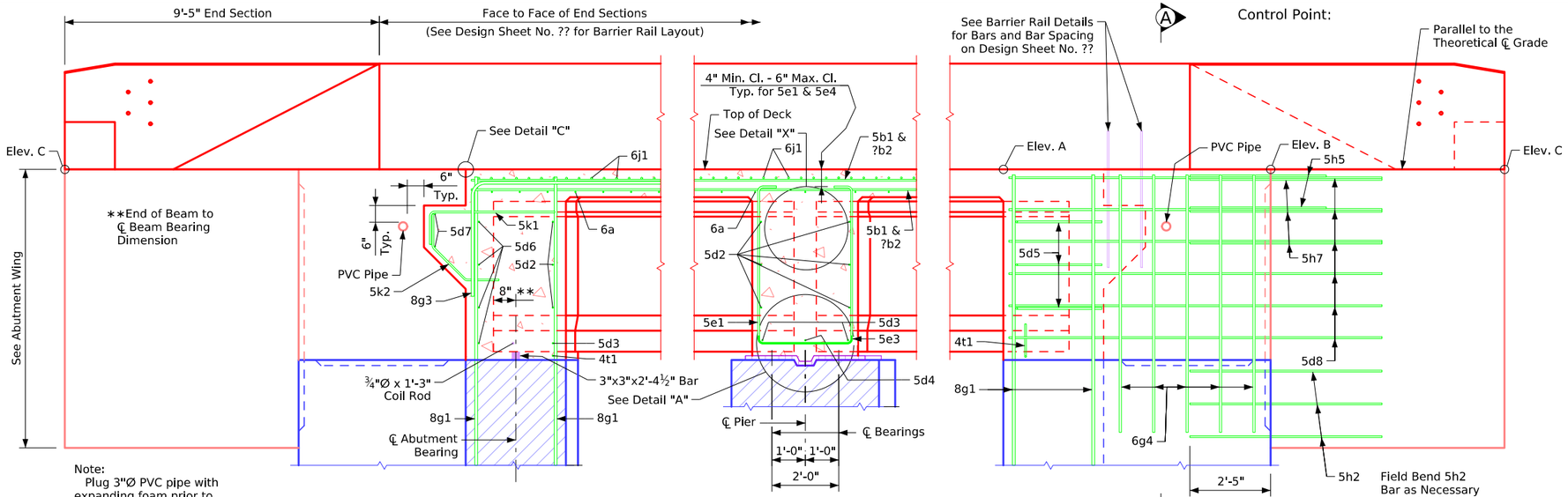

Note:
Plug 3"Ø PVC pipe with expanding foam prior to backfilling behind abutments.

Part Longitudinal Section Near Gutter

(For details of Intermediate Diaphragm see Design Sheet No. ??)

Part End View at Abutment

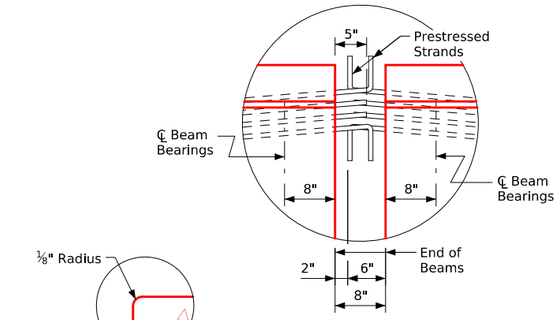

Detail "X"

Detail "C"

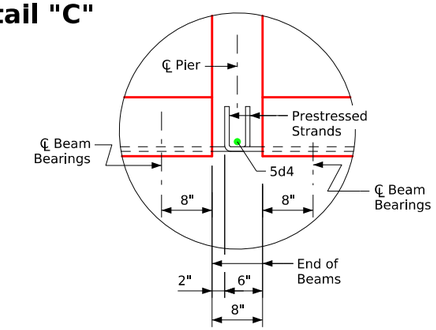

Detail "A"

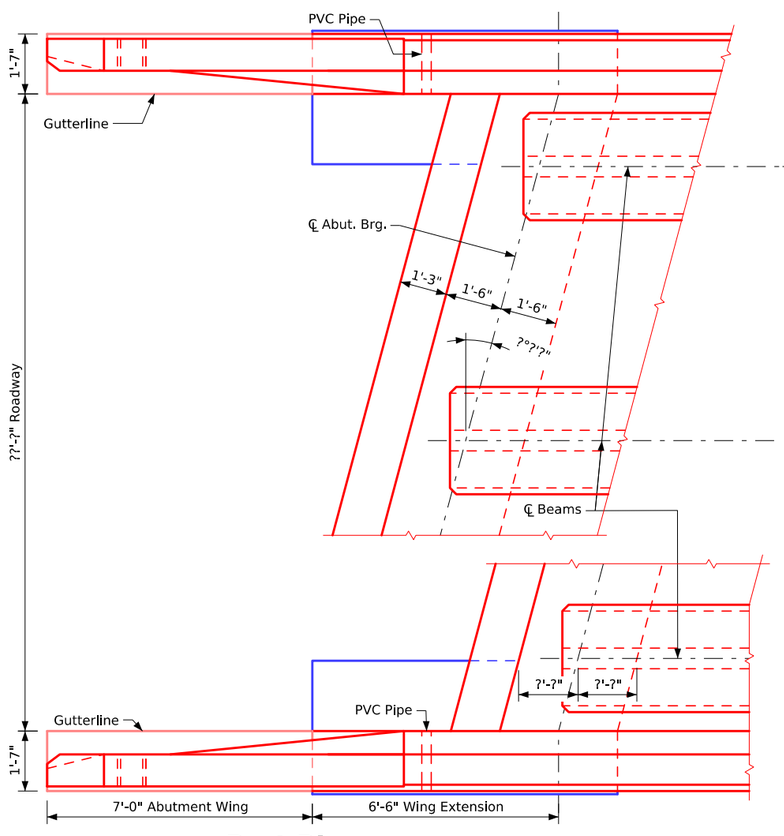

Part Plan

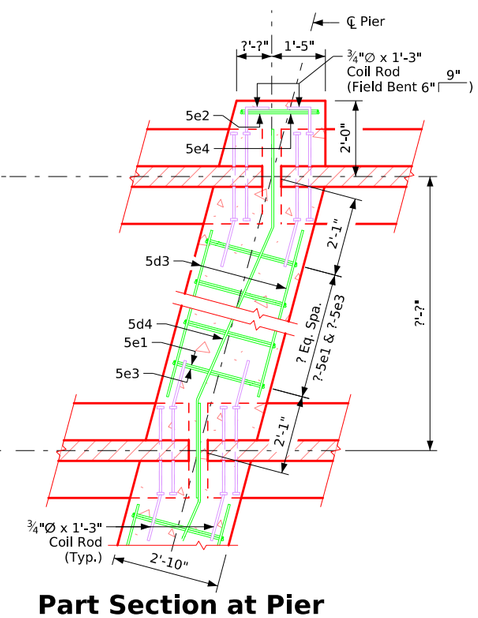

Part Section at Pier

(See cross section thru deck for number of diaphragm hoop bars between beams)

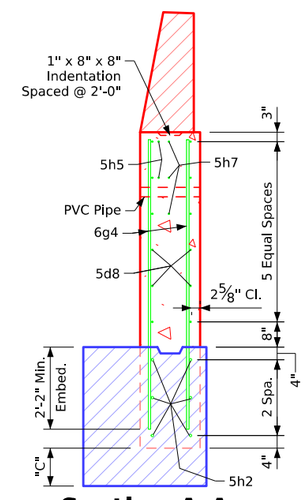

Section A-A

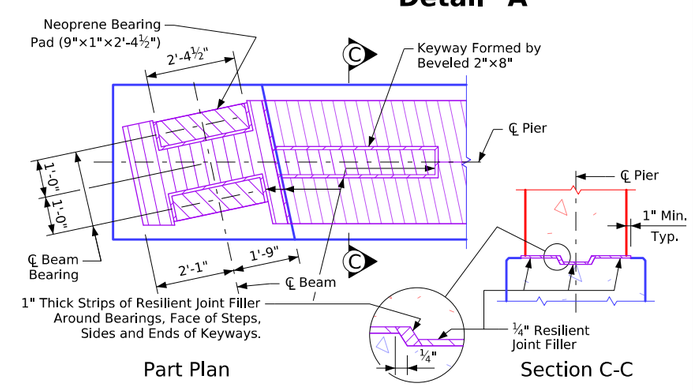

Top of Fixed Pier Details

Table of Wingwall Elevations

Location	Dim "C"	Elev. A	Elev. B	Elev. C
S.W. Corner	?'-?"	???.??	???.??	???.??
N.W. Corner	?'-?"	???.??	???.??	???.??
S.E. Corner	?'-?"	???.??	???.??	???.??
N.E. Corner	?'-?"	???.??	???.??	???.??

Abut. & Pier Diaphragm Details

Revised 01-12: Added Field Bend 5h4 Bar to Avoid Pile in Abutment Wing Note.
Revised 05-2026: Moved location of Detail "C" to upper right of sheet (was in lower center of sheet). In "Section A-A", flipped/switched orientation of horizontal and vertical bars in outside face of wingwall. In "Top of Fixed Pier Details", corrected detailing error of missing hatch pattern. Added "Control Point" text. In "Part Section at Pier" details changed Coil Rod to Field Bent (was labeled Bent).

BTIntegralBridges.dgn - 4509-BTCD - Issued 02-08. This Sheet Re-Issued 11-2023. Sheet Format Update.

FILE NO.	ENGLISH	DESIGN TEAM	"BTC" or "BTD" Beams - Part Plan & Longitudinal Section - (L,A,) 7°31 - 15° Skew	Standard Sheet 4509-BTCD	COUNTY	PROJECT NUMBER	SHEET NUMBER

8:25:50 AM 6/11/2026 bkloss pw:\\NTPwint1.dot.int.lan:PWMain\Documents\Highway\Bridge\Standards\Bridges\BTIntegralBridges.dgn

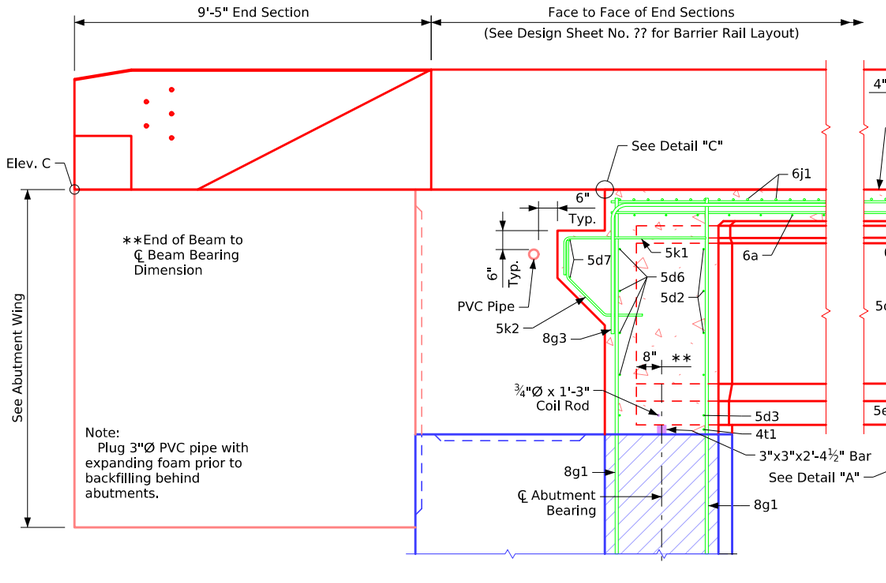

Part Longitudinal Section Near Gutter

(For details of Intermediate Diaphragm see Design Sheet No. ??)

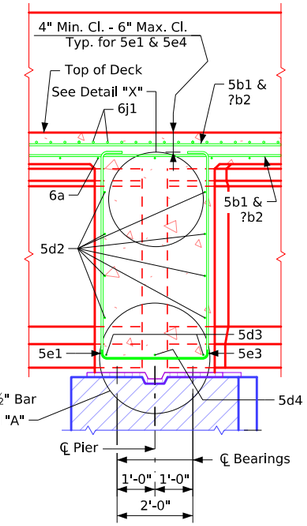

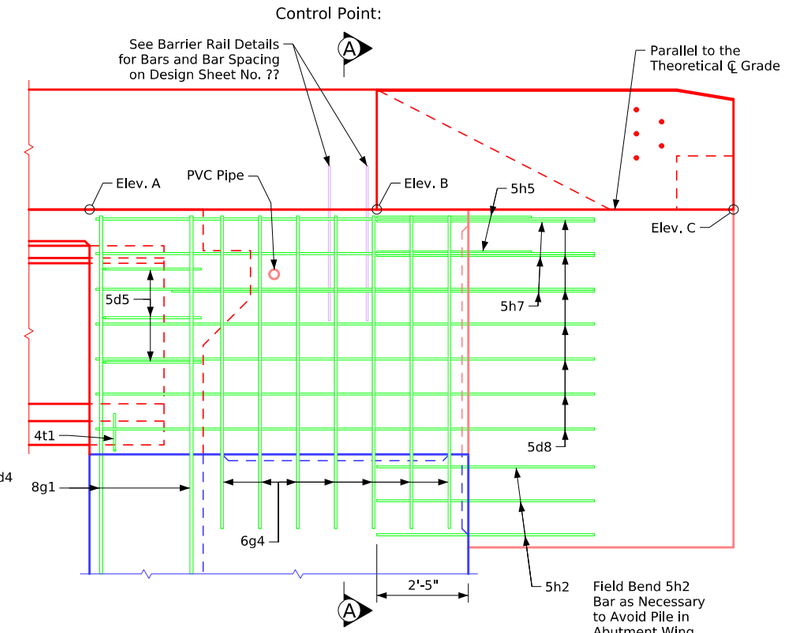

Part End View at Abutment

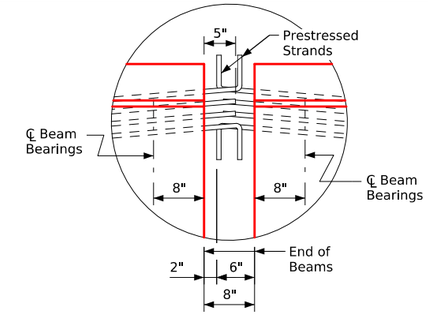

Detail "X"

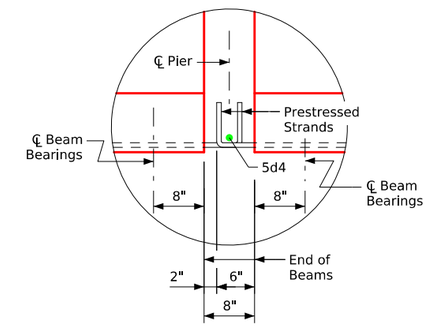

Detail "A"

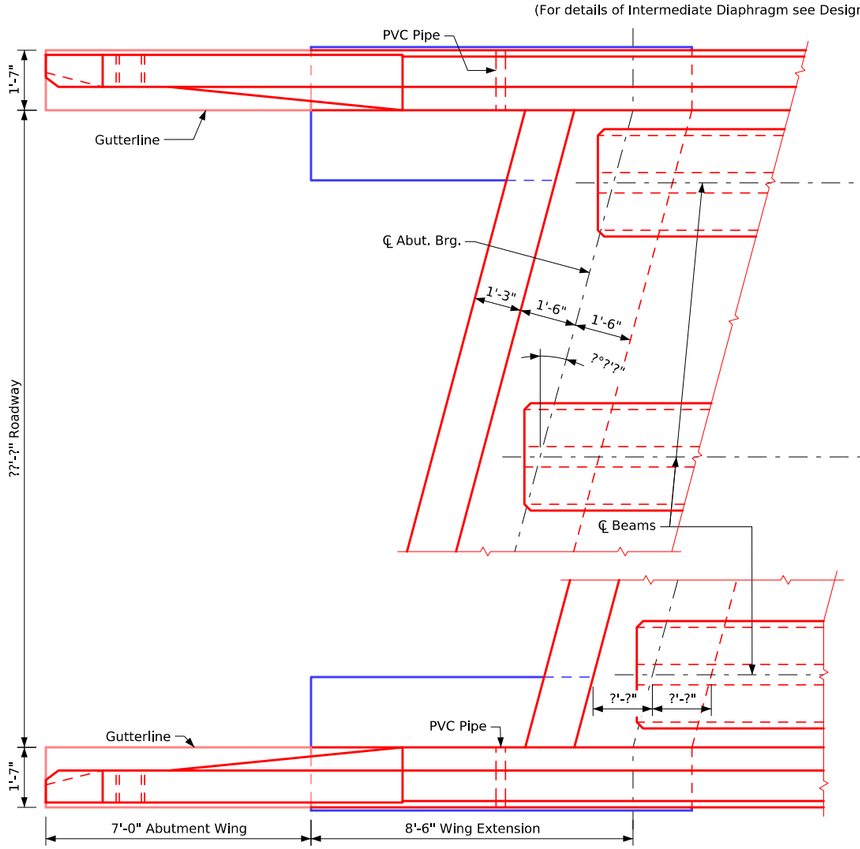

Part Plan

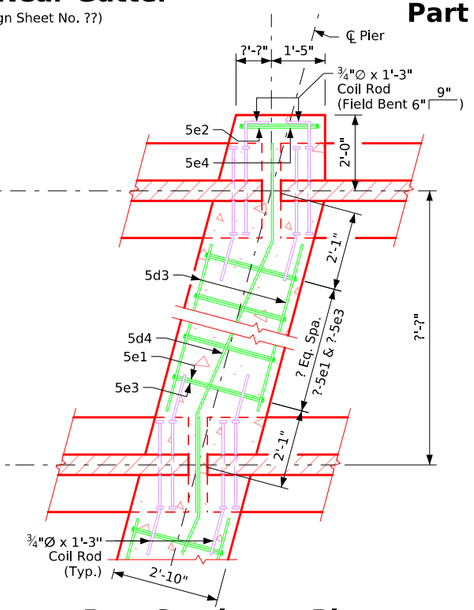

Part Section at Pier

(See cross section thru deck for number of diaphragm hoop bars between beams)

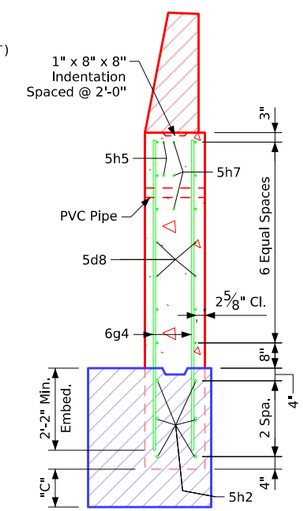

Section A-A

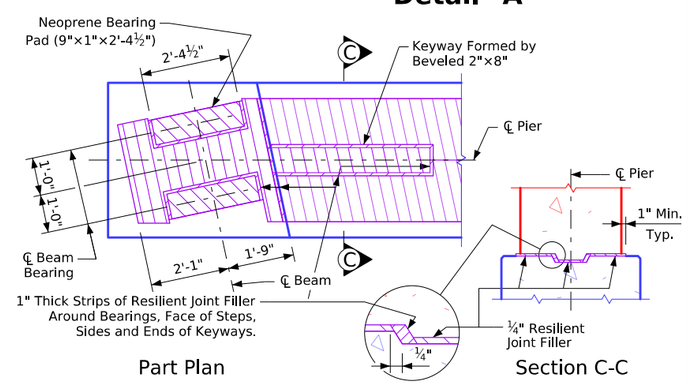

Top of Fixed Pier Details

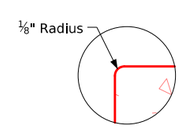

Detail "C"

Table of Wingwall Elevations

Location	Dim "C"	Elev. A	Elev. B	Elev. C
S.W. Corner	?'-?"	???.??	???.??	???.??
N.W. Corner	?'-?"	???.??	???.??	???.??
S.E. Corner	?'-?"	???.??	???.??	???.??
N.E. Corner	?'-?"	???.??	???.??	???.??

Abut. & Pier Diaphragm Details

Revised 01-12: Added Field Bend 5h4 Bar to Avoid Pile in Abutment Wing Note.
Revised 05-2026: In "Section A-A", flipped/switched orientation of horizontal and vertical bars in outside face of wingwall. In "Top of Fixed Pier Details", corrected detailing error of missing hatch pattern. Added "Control Point" text.
In "Part Section at Pier" details changed Coil Rod to Field Bent (was labeled Bent).
BTIntegralBridges.dgn - 4509-BTE - Issued 02-08. This Sheet Re-Issued 11-2023. Sheet Format Update.

FILE NO.	ENGLISH	DESIGN TEAM	"BTE" Beams - Part Plan & Longitudinal Section - (L.A.) 7°31 - 15° Skew	Standard Sheet 4509-BTE	COUNTY	PROJECT NUMBER	SHEET NUMBER

8:25:51 AM 6/11/2026 bkloss pw:\\NTPwint1.dot.int.lan:PWMain\Documents\Highway\Bridge\Standards\Bridges\BTIntegralBridges.dgn

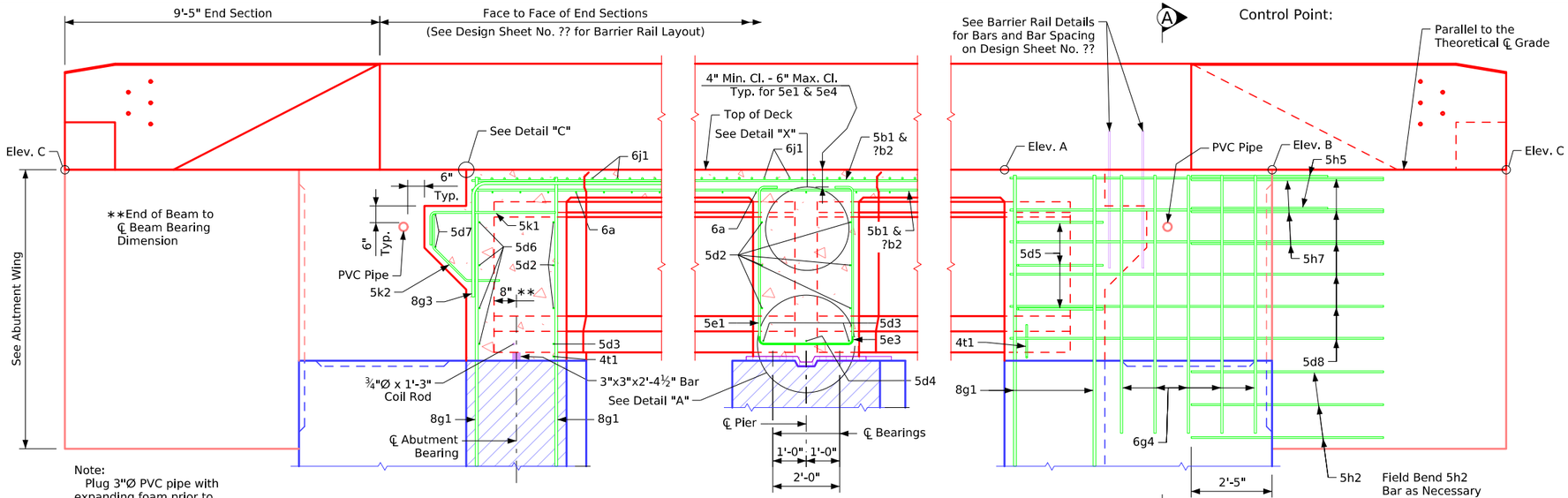

Note:
Plug 3"Ø PVC pipe with expanding foam prior to backfilling behind abutments.

Part Longitudinal Section Near Gutter

(For details of Intermediate Diaphragm see Design Sheet No. ??)

Part End View at Abutment

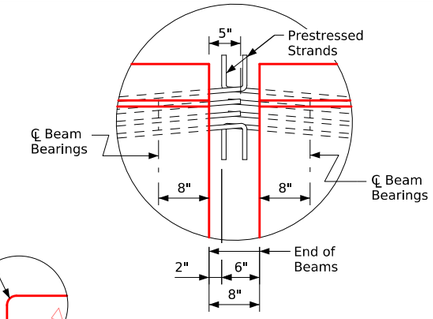

Detail "X"

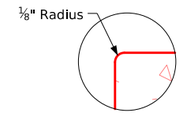

Detail "C"

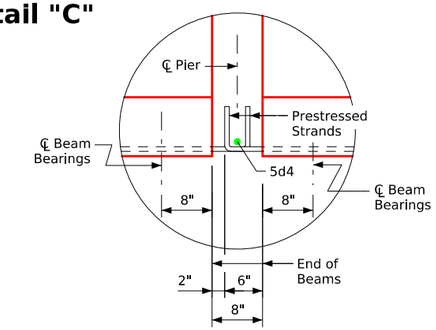

Detail "A"

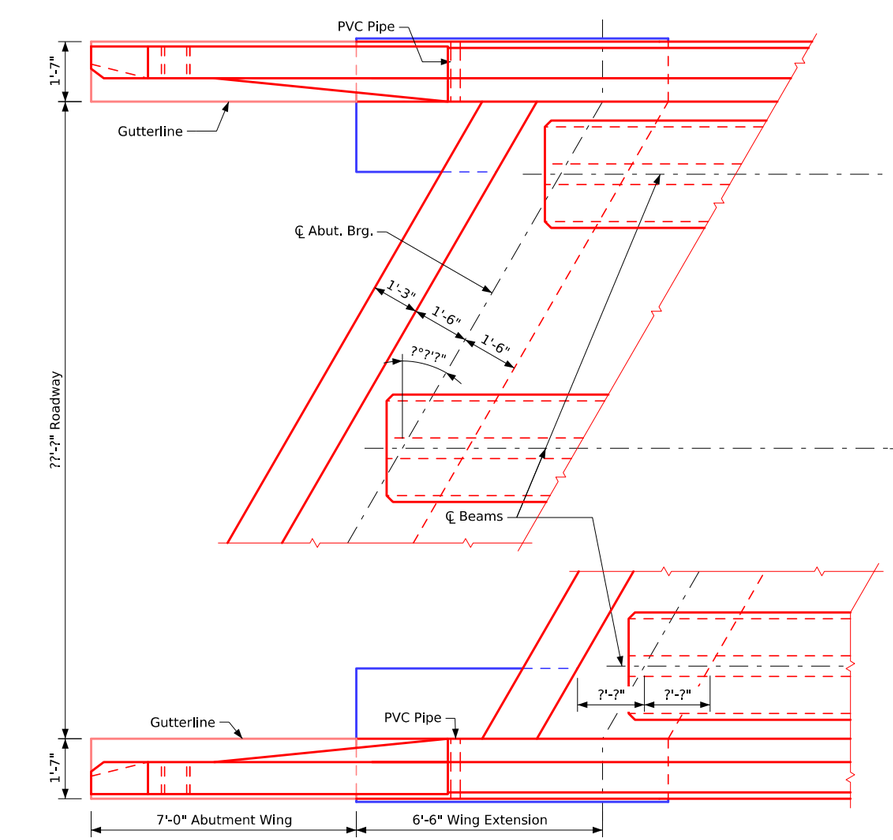

Part Plan

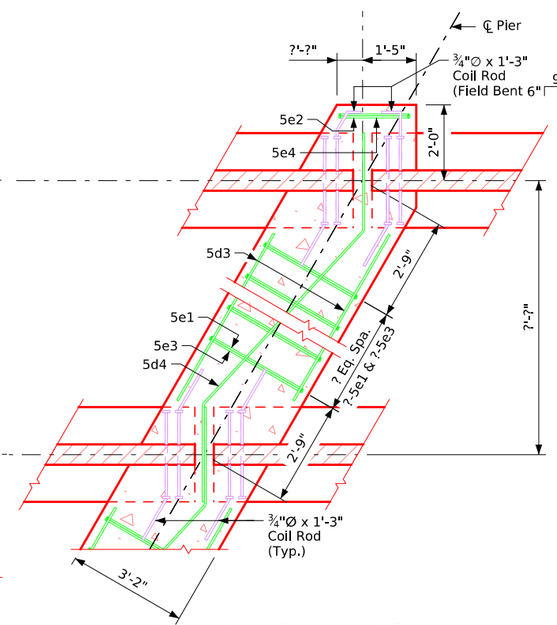

Part Section at Pier

(See cross section thru deck for number of diaphragm hoop bars between beams)

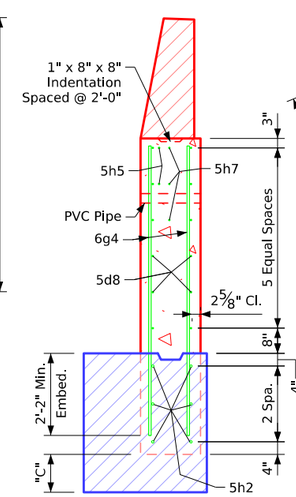

Section A-A

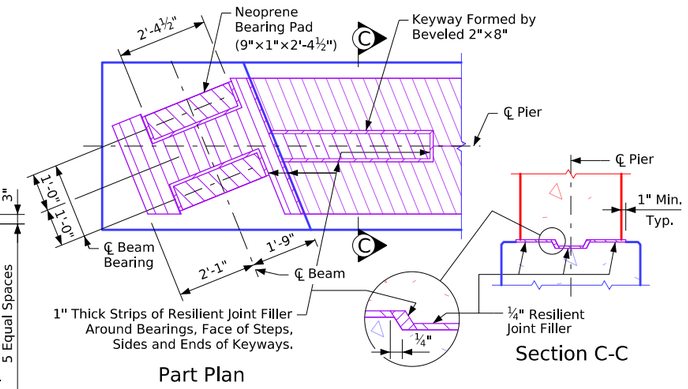

Part Plan

Section C-C

Top of Fixed Pier Details

Table of Wingwall Elevations

Location	Dim "C"	Elev. A	Elev. B	Elev. C
S.W. Corner	?'-?"	???.??	???.??	???.??
N.W. Corner	?'-?"	???.??	???.??	???.??
S.E. Corner	?'-?"	???.??	???.??	???.??
N.E. Corner	?'-?"	???.??	???.??	???.??

Abut. & Pier Diaphragm Details

Revised 01-12: Added Field Bend 5h4 Bar to Avoid Pile in Abutment Wing Note.
Revised 05-2026: Moved location of Detail "C" to upper right of sheet (was in lower center of sheet). In "Section A-A", flipped/switched orientation of horizontal and vertical bars in outside face of wingwall. In "Top of Fixed Pier Details", corrected detailing error of missing hatch pattern. Added "Control Point" text. In "Part Section at Pier" details changed Coil Rod to Field Bent (was labeled Bent).
BTIntegralBridges.dgn - 4510-BTCD - Issued 02-08. This Sheet Re-Issued 11-2023. Sheet Format Update.

FILE NO.	ENGLISH	DESIGN TEAM	"BTC" or "BTD" Beams - Part Plan & Longitudinal Section - (L.A.) 15°01 - 30° Skew	Standard Sheet 4510-BTCD	COUNTY	PROJECT NUMBER	SHEET NUMBER

8:25:52 AM 6/11/2026 bkloss pw:\\NTPwint1.dot.int.lan:PWMain\Documents\Highway\Bridge\Standards\Bridges\BTIntegralBridges.dgn

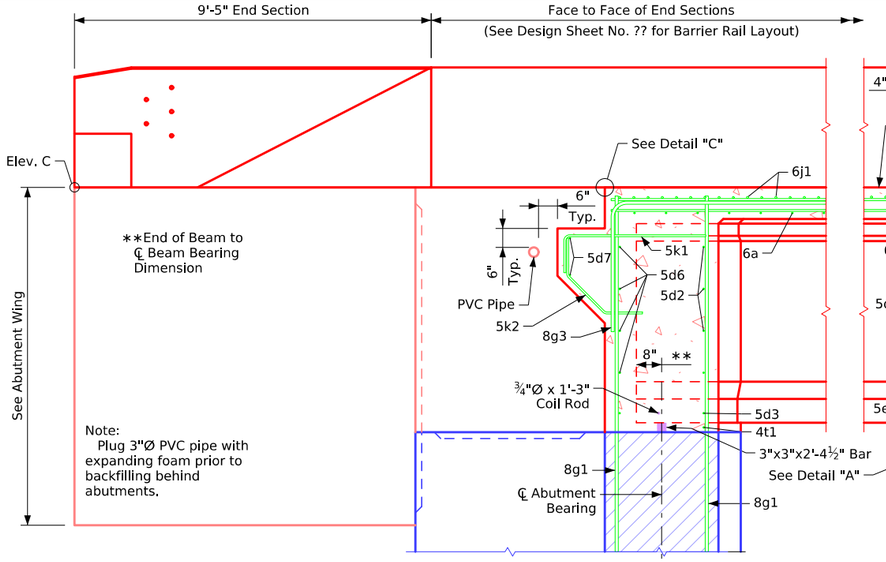

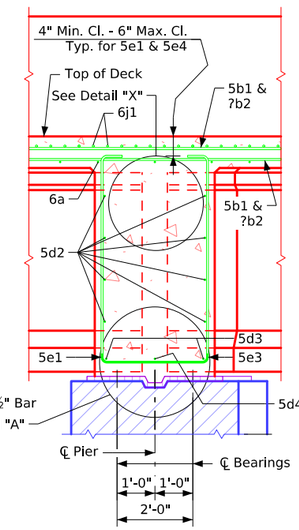

Part Longitudinal Section Near Gutter

(For details of Intermediate Diaphragm see Design Sheet No. ??)

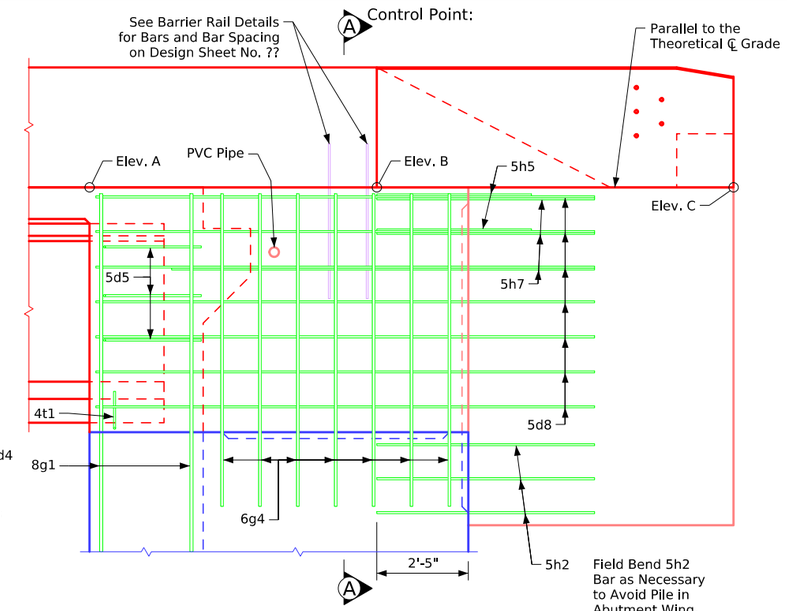

Part End View at Abutment

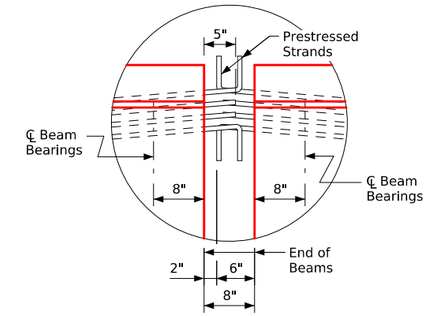

Detail "X"

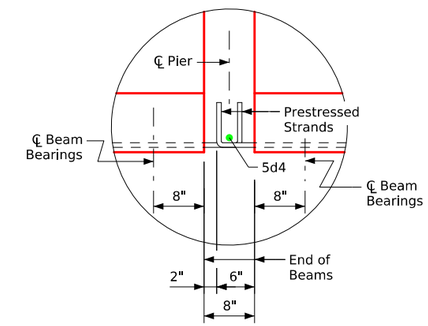

Detail "A"

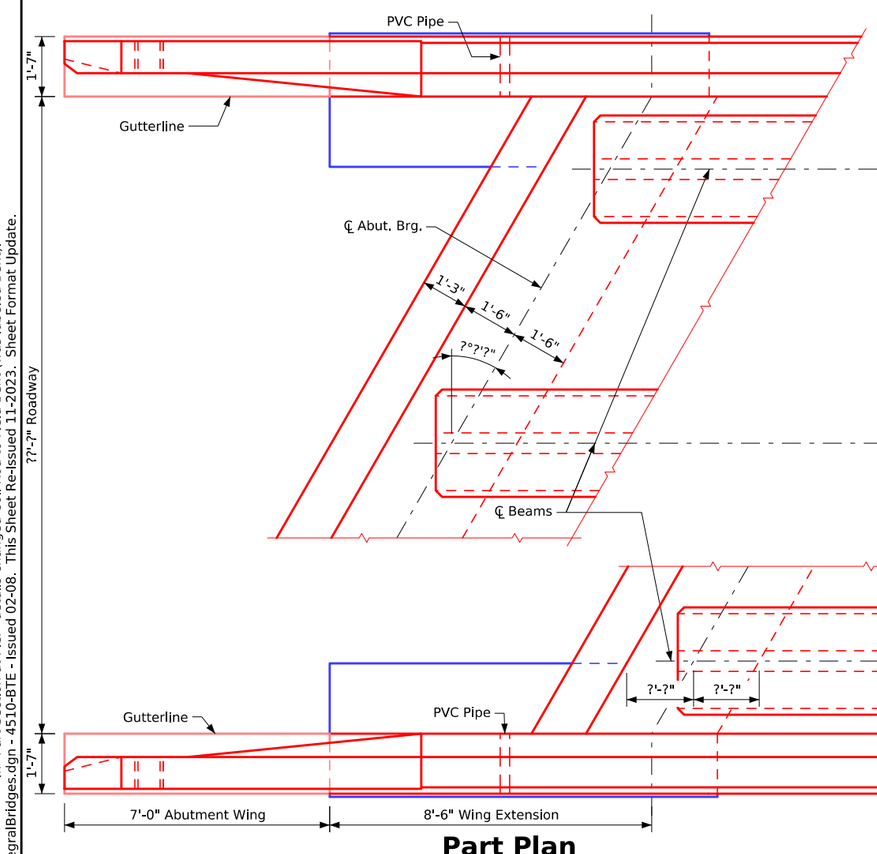

Part Plan

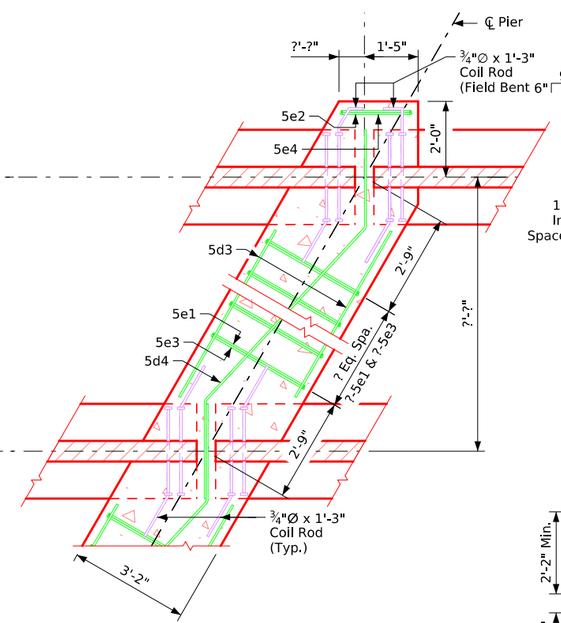

Part Section at Pier

(See cross section thru deck for number of diaphragm hoop bars between beams)

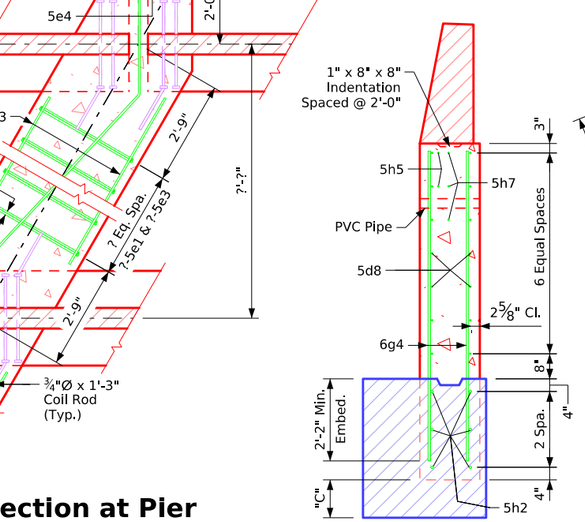

Section A-A

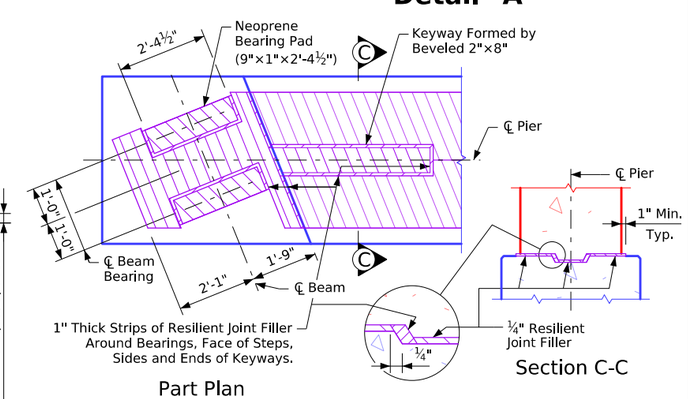

Part Plan

Top of Fixed Pier Details

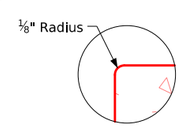

Detail "C"

Table of Wingwall Elevations

Location	Dim "C"	Elev. A	Elev. B	Elev. C
S.W. Corner	?'-?"	???.??	???.??	???.??
N.W. Corner	?'-?"	???.??	???.??	???.??
S.E. Corner	?'-?"	???.??	???.??	???.??
N.E. Corner	?'-?"	???.??	???.??	???.??

Abut. & Pier Diaphragm Details

Revised 01-12: Added Field Bend 5h4 Bar to Avoid Pile in Abutment Wing Note.
Revised 05-2026: In "Section A-A", flipped/switched orientation of horizontal and vertical bars in outside face of wingwall. In "Top of Fixed Pier Details", corrected detailing error of missing hatch pattern. Added "Control Point" text.
In "Part Section at Pier" details changed Coil Rod to Field Bent (was labeled Bent).
BTIntegralBridges.dgn - 4510-BTE - Issued 02-08. This Sheet Re-Issued 11-2023. Sheet Format Update.

FILE NO.	ENGLISH	DESIGN TEAM	"BTE" Beams - Part Plan & Longitudinal Section - (L,A,) 15°01 - 30° Skew	Standard Sheet 4510-BTE	COUNTY	PROJECT NUMBER	SHEET NUMBER

8:25:52 AM 6/11/2026 bkloss pw:\\NTPwint1.dot.int.lan:PWMain\Documents\Highway\Bridge\Standards\Bridges\BTIntegralBridges.dgn

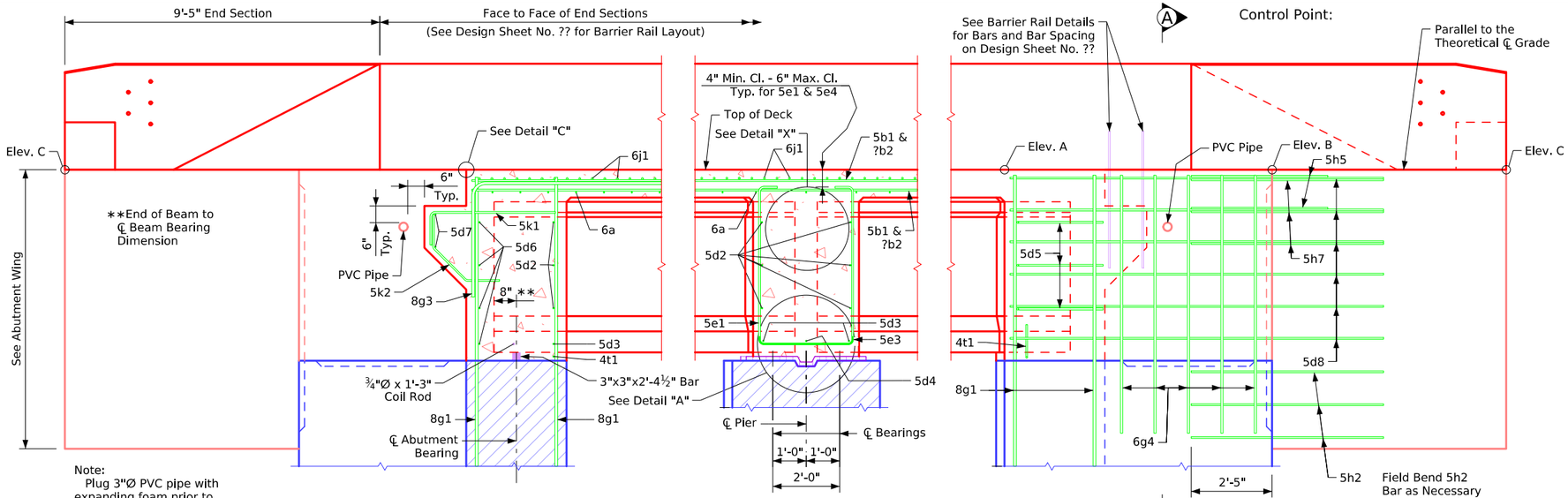

Note:
Plug 3"Ø PVC pipe with expanding foam prior to backfilling behind abutments.

Part Longitudinal Section Near Gutter

(For details of Intermediate Diaphragm see Design Sheet No. ??)

Part End View at Abutment

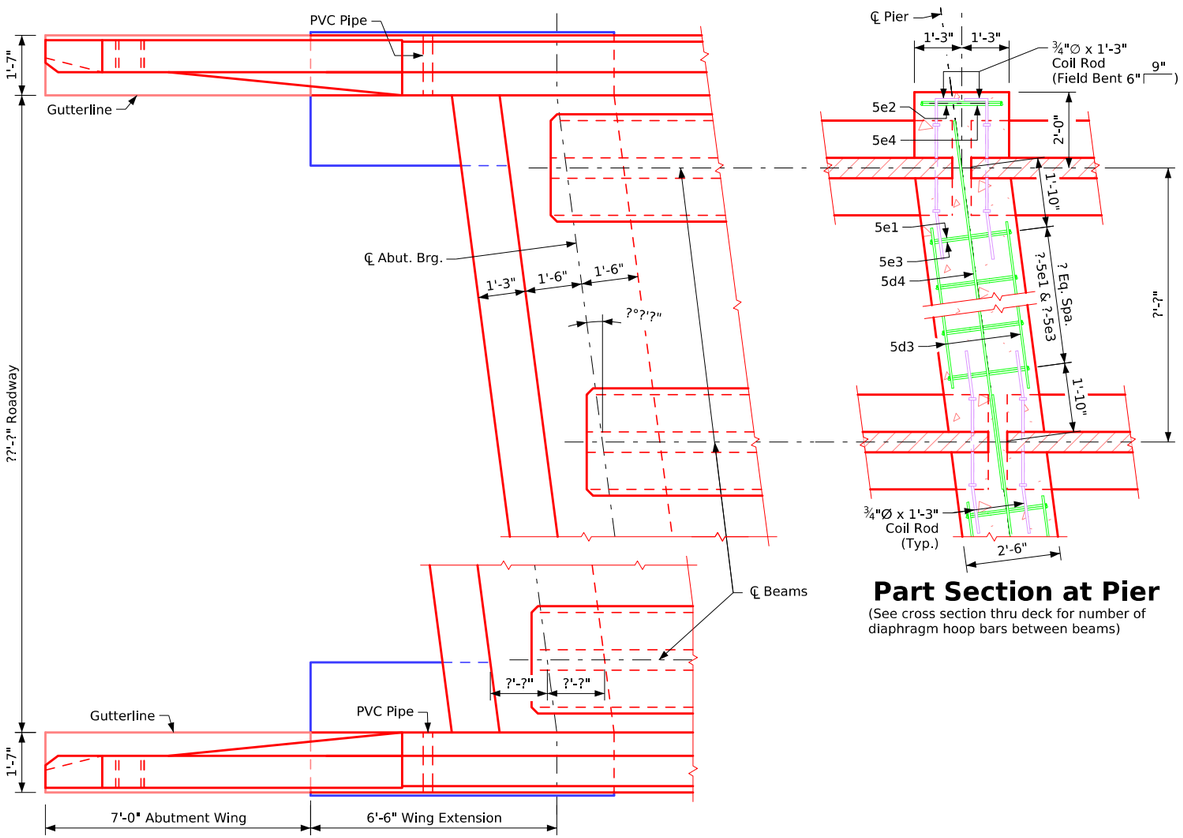

Part Plan

Part Section at Pier

(See cross section thru deck for number of diaphragm hoop bars between beams)

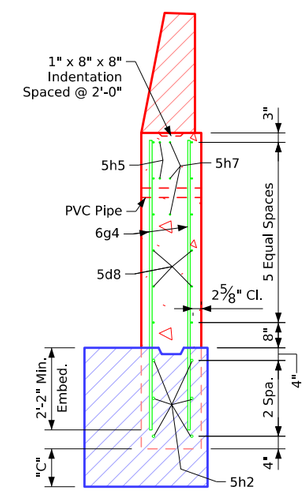

Section A-A

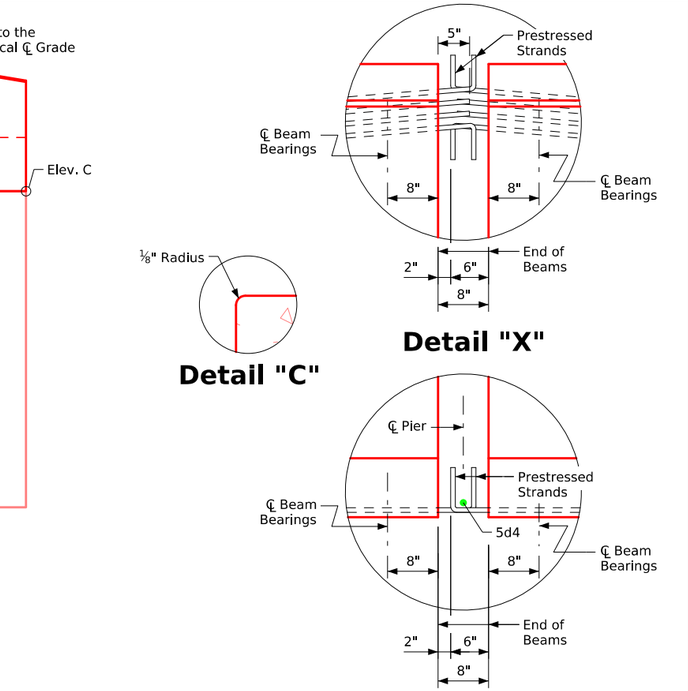

Detail "C"

Detail "X"

Detail "A"

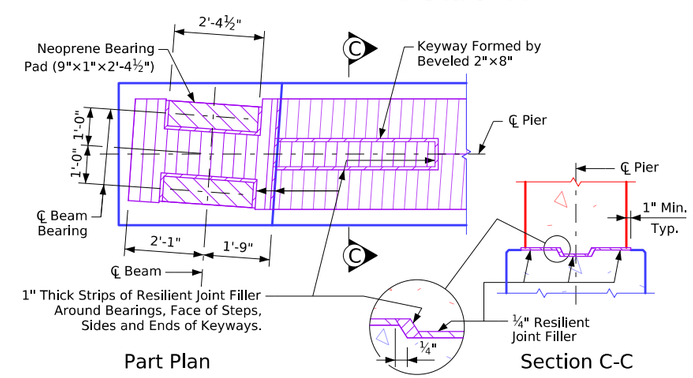

Part Plan

Section C-C

Top of Fixed Pier Details

Table of Wingwall Elevations

Location	Dim "C"	Elev. A	Elev. B	Elev. C
S.W. Corner	?'-?"	???.??	???.??	???.??
N.W. Corner	?'-?"	???.??	???.??	???.??
S.E. Corner	?'-?"	???.??	???.??	???.??
N.E. Corner	?'-?"	???.??	???.??	???.??

Abut. & Pier Diaphragm Details

Revised 01-12: Added Field Bend 5h4 Bar to Avoid Pile in Abutment Wing Note.
Revised 05-2026: Moved location of Detail "C" to upper right of sheet (was in lower center of sheet). In "Section A-A", flipped/switched orientation of horizontal and vertical bars in outside face of wingwall. In "Top of Fixed Pier Details", corrected detailing error of missing hatch pattern. Added "Control Point" text. In "Part Section at Pier" details changed Coil Rod to Field Bent (was labeled Bent).
BTIntegralBridges.dgn - 4511-BTCD - Issued 02-08. This Sheet Re-Issued 11-2023. Sheet Format Update.

FILE NO.	ENGLISH	DESIGN TEAM	"BTC" or "BTD" Beams - Part Plan & Longitudinal Section - (R.A.) 0°01 - 7°30 Skew	Standard Sheet 4511-BTCD	COUNTY	PROJECT NUMBER	SHEET NUMBER

8:25:53 AM 6/11/2026 bkloss pw:\\NTPwint1.dot.int.lan:PWMain\Documents\Highway\Bridge\Standards\Bridges\BTIntegralBridges.dgn

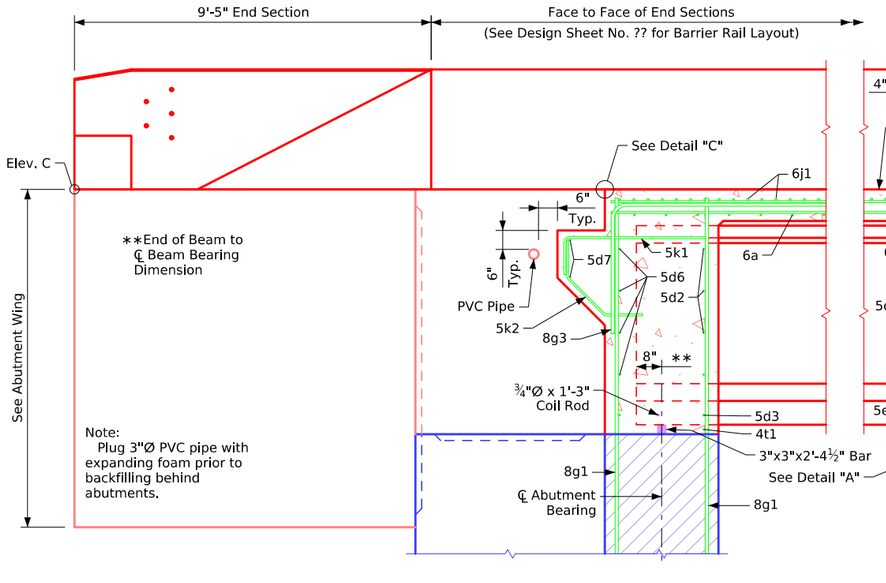

Part Longitudinal Section Near Gutter

(For details of Intermediate Diaphragm see Design Sheet No. ??)

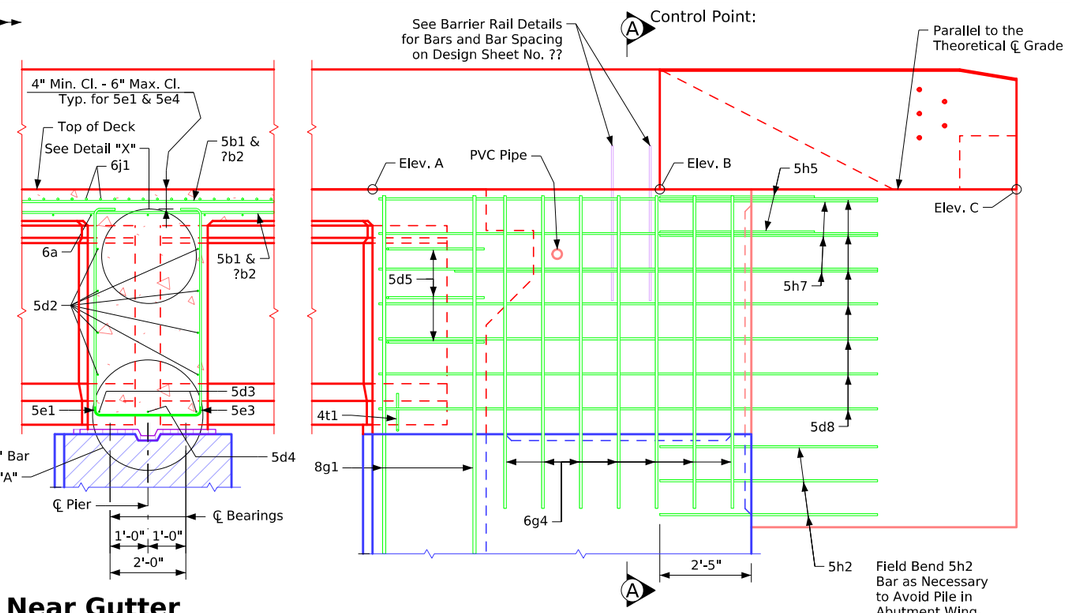

Part End View at Abutment

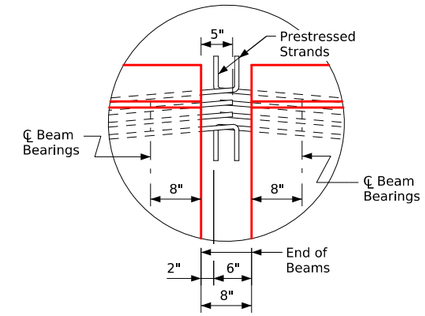

Detail "X"

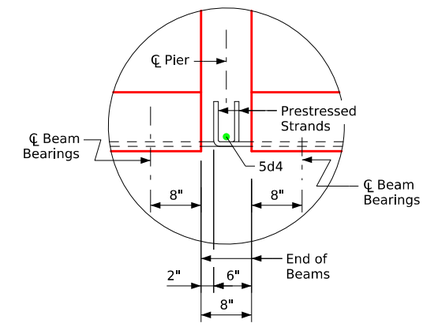

Detail "A"

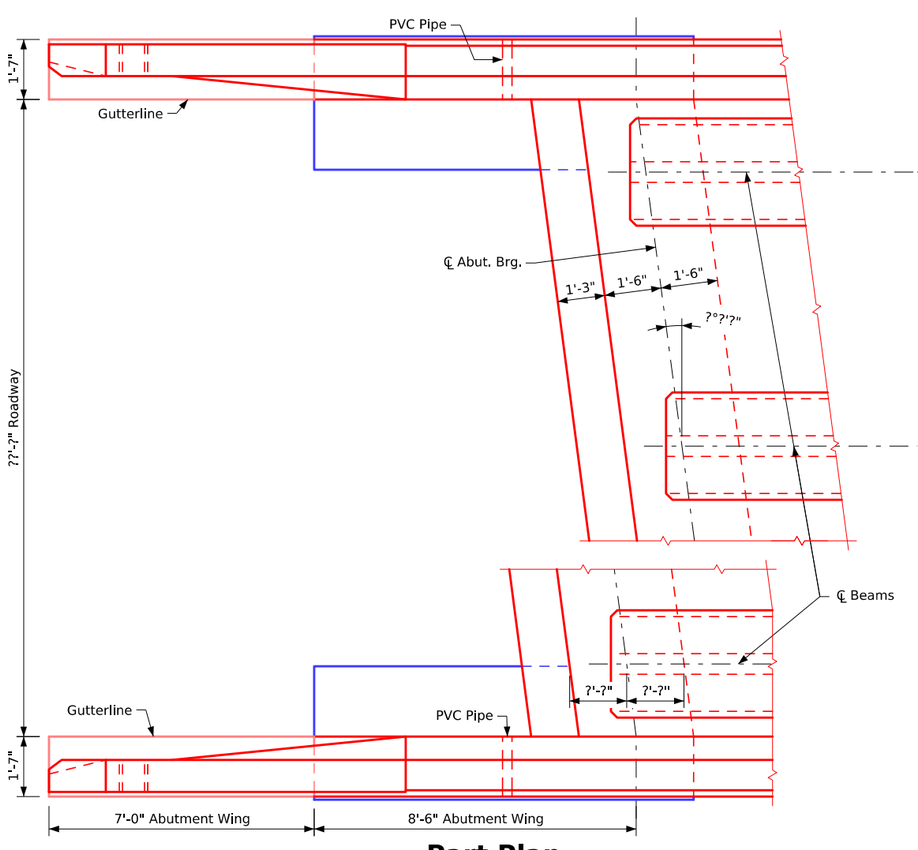

Part Plan

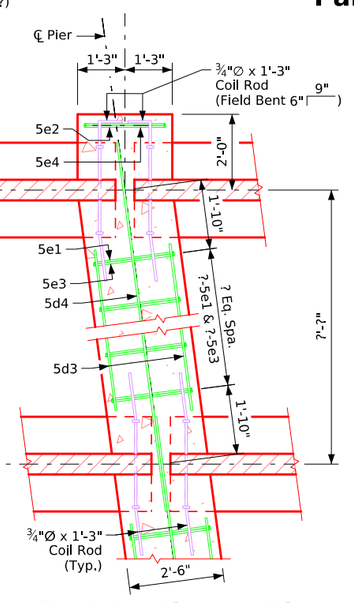

Part Section at Pier

(See cross section thru deck for number of diaphragm hoop bars between beams)

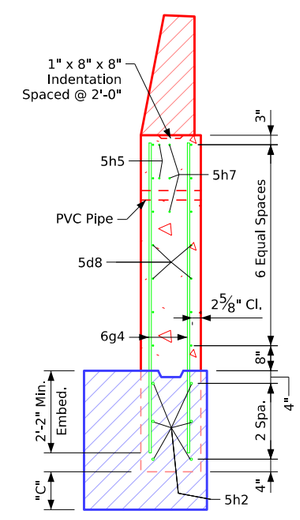

Section A-A

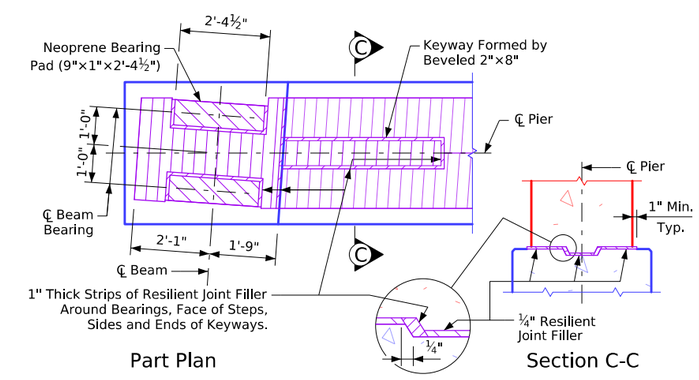

Top of Fixed Pier Details

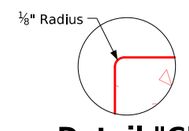

Detail "C"

Table of Wingwall Elevations

Location	Dim "C"	Elev. A	Elev. B	Elev. C
S.W. Corner	?'-?"	???.??	???.??	???.??
N.W. Corner	?'-?"	???.??	???.??	???.??
S.E. Corner	?'-?"	???.??	???.??	???.??
N.E. Corner	?'-?"	???.??	???.??	???.??

Abut. & Pier Diaphragm Details

Revised 01-12: Added Field Bend 5h4 Bar to Avoid Pile in Abutment Wing Note.
Revised 05-2026: In "Section A-A", flipped/switched orientation of horizontal and vertical bars in outside face of wingwall. In "Top of Fixed Pier Details", corrected detailing error of missing hatch pattern. Added "Control Point" text.
In "Part Section at Pier" details changed Coil Rod to Field Bent (was labeled Bent).
BTIntegralBridges.dgn - 4511-BTE - Issued 02-08. This Sheet Re-Issued 11-2023. Sheet Format Update.

FILE NO.	ENGLISH	DESIGN TEAM	"BTE" Beams - Part Plan & Longitudinal Section - (R.A.) 0°01 - 7°30 Skew	Standard Sheet 4511-BTE	COUNTY	PROJECT NUMBER	SHEET NUMBER

8:25:53 AM 6/11/2026 bkloss pw:\\NTPwint1.dot.int.lan:PWMain\Documents\Highway\Bridge\Standards\Bridges\BTIntegralBridges.dgn

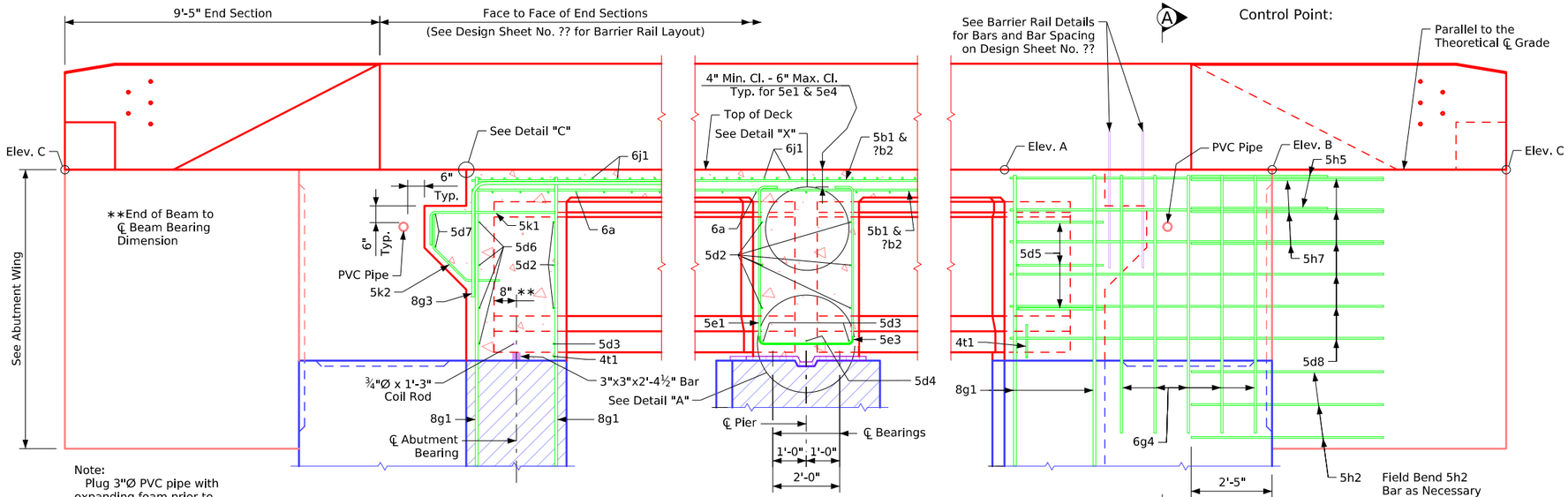

Part Longitudinal Section Near Gutter

(For details of Intermediate Diaphragm see Design Sheet No. ??)

Part End View at Abutment

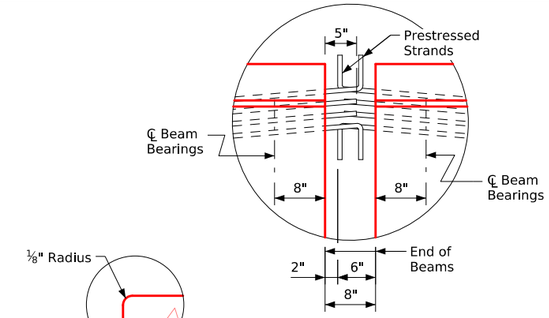

Detail "X"

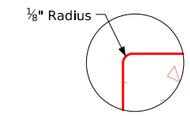

Detail "C"

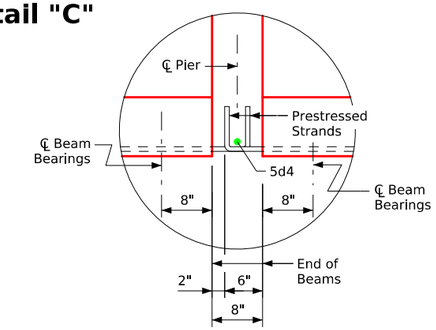

Detail "A"

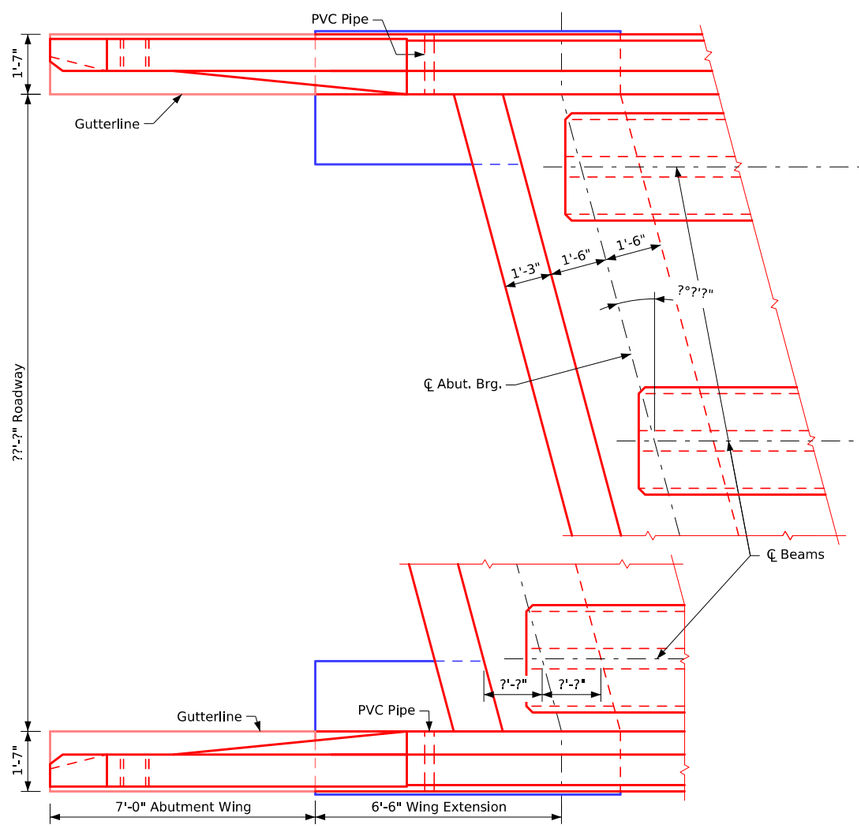

Part Plan

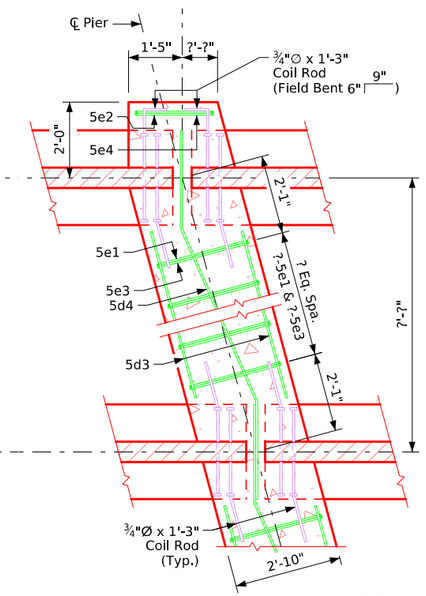

Part Section at Pier

(See cross section thru deck for number of diaphragm hoop bars between beams)

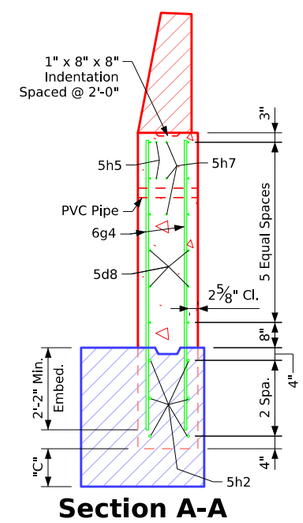

Section A-A

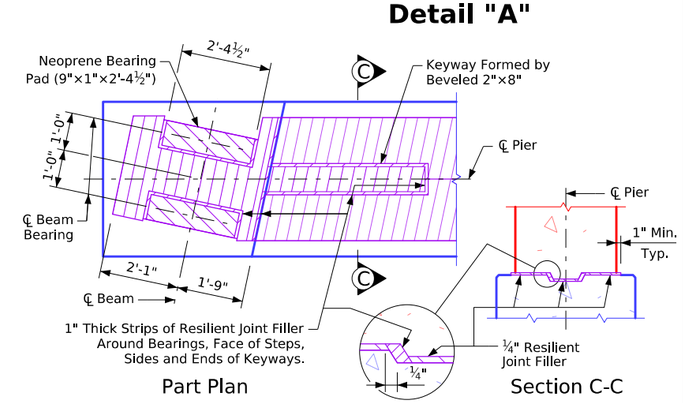

Top of Fixed Pier Details

Table of Wingwall Elevations

Location	Dim "C"	Elev. A	Elev. B	Elev. C
S.W. Corner	?'-?"	???.??	???.??	???.??
N.W. Corner	?'-?"	???.??	???.??	???.??
S.E. Corner	?'-?"	???.??	???.??	???.??
N.E. Corner	?'-?"	???.??	???.??	???.??

Abut. & Pier Diaphragm Details

Revised 01-12: Added Field Bend 5h4 Bar to Avoid Pile in Abutment Wing Note.
Revised 05-2026: Moved location of Detail "C" to upper right of sheet (was in lower center of sheet). In "Section A-A", flipped/switched orientation of horizontal and vertical bars in outside face of wingwall. In "Top of Fixed Pier Details", corrected detailing error of missing hatch pattern. Added "Control Point" text. In "Part Section at Pier" details changed Coil Rod to Field Bent (was labeled Bent).
BTIntegralBridges.dgn - 4512-BTCD - Issued 02-08. This Sheet Re-Issued 11-2023. Sheet Format Update.

FILE NO.	ENGLISH	DESIGN TEAM	"BTC" or "BTD" Beams - Part Plan & Longitudinal Section - (R.A.) 7°31 - 15° Skew	Standard Sheet 4512-BTCD	COUNTY	PROJECT NUMBER	SHEET NUMBER

8:25:54 AM 6/11/2026 bkloss pw:\\NTPwint1.dot.int.lan:PWMain\Documents\Highway\Bridge\Standards\Bridges\BTIntegralBridges.dgn

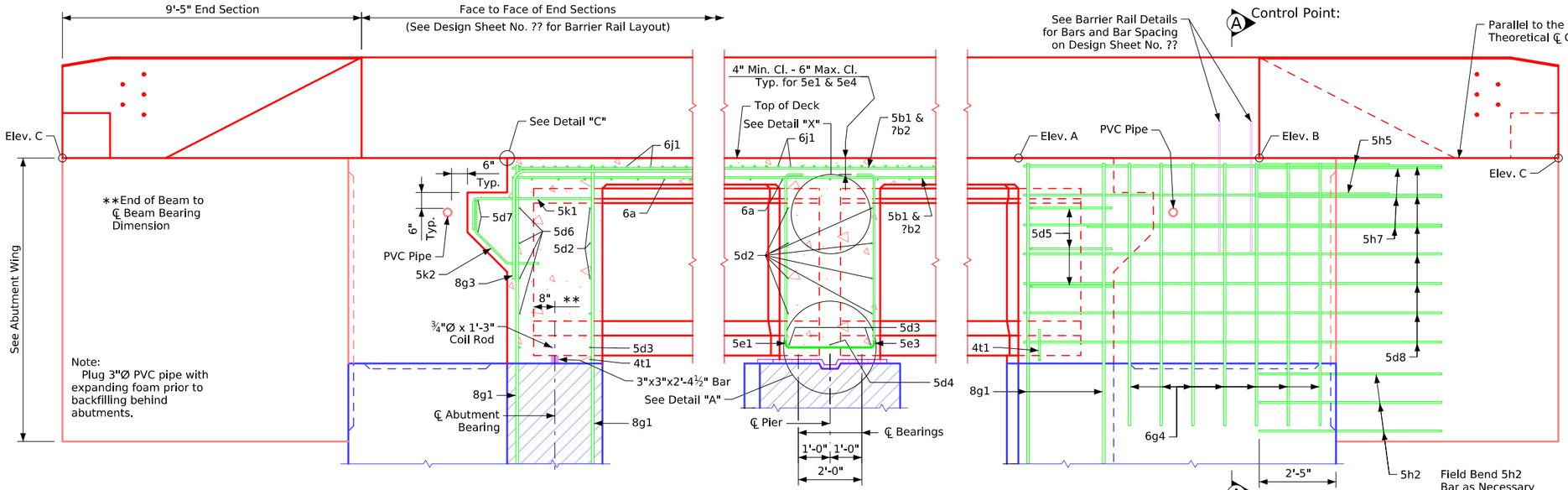

Part Longitudinal Section Near Gutter

(For details of Intermediate Diaphragm see Design Sheet No. ??)

Part End View at Abutment

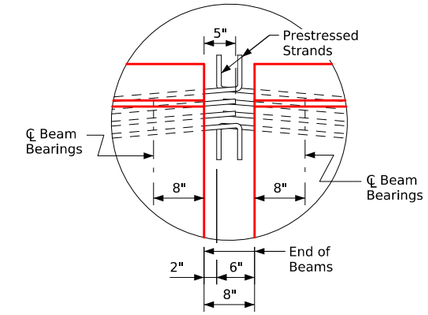

Detail "X"

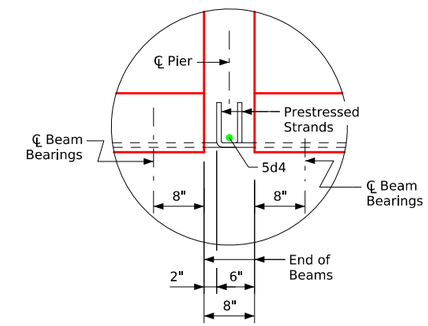

Detail "A"

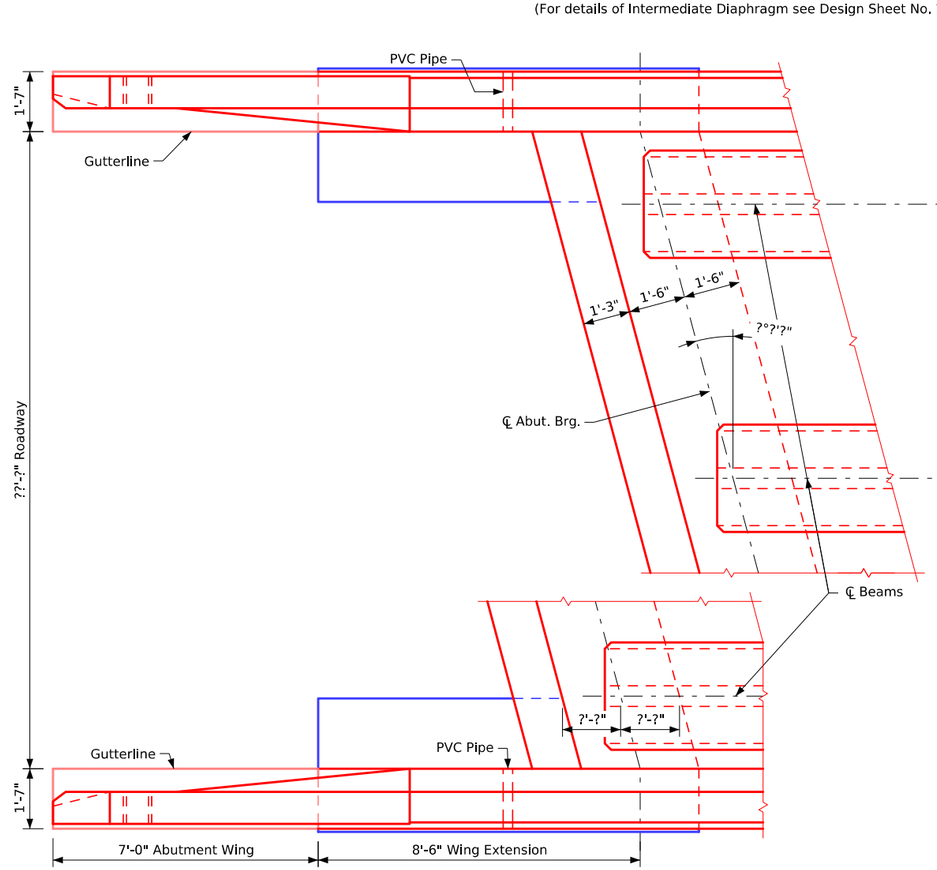

Part Plan

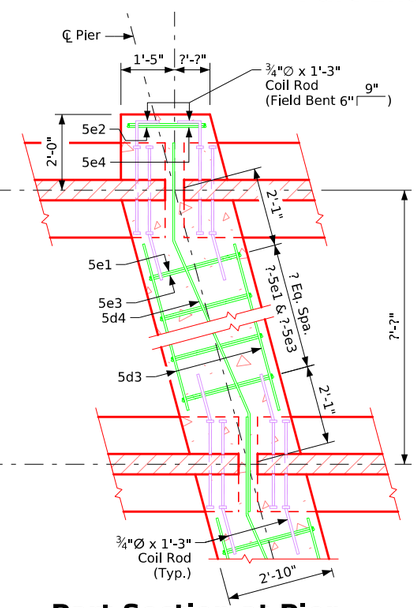

Part Section at Pier

(See cross section thru deck for number of diaphragm hoop bars between beams)

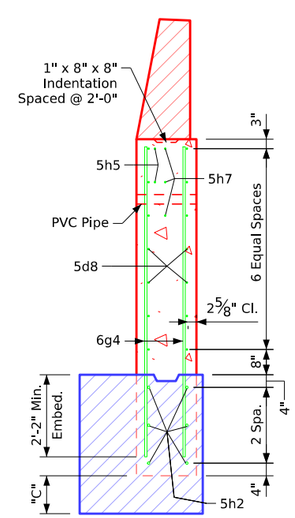

Section A-A

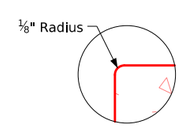

Detail "C"

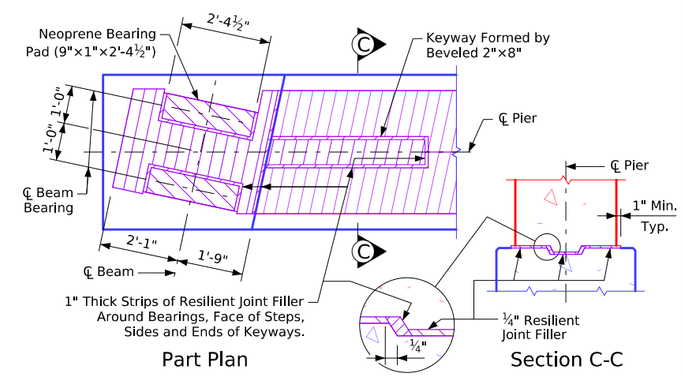

Top of Fixed Pier Details

Table of Wingwall Elevations

Location	Dim "C"	Elev. A	Elev. B	Elev. C
S.W. Corner	?'-?"	???.??	???.??	???.??
N.W. Corner	?'-?"	???.??	???.??	???.??
S.E. Corner	?'-?"	???.??	???.??	???.??
N.E. Corner	?'-?"	???.??	???.??	???.??

Abut. & Pier Diaphragm Details

Revised 01-12: Added Field Bend 5h4 Bar to Avoid Pile in Abutment Wing Note.
Revised 05-2026: In "Section A-A", flipped/switched orientation of horizontal and vertical bars in outside face of wingwall. In "Top of Fixed Pier Details", corrected detailing error of missing hatch pattern. Added "Control Point" text.
In "Part Section at Pier" details changed Coil Rod to Field Bent (was labeled Bent).
BTIntegralBridges.dgn - 4512-BTE - Issued 02-08. This Sheet Re-Issued 11-2023. Sheet Format Update.

FILE NO.	ENGLISH	DESIGN TEAM	"BTE" Beams - Part Plan & Longitudinal Section - (R,A,) 7°31 - 15° Skew	Standard Sheet 4512-BTE	COUNTY	PROJECT NUMBER	SHEET NUMBER

8:25:54 AM 6/11/2026 bkloss pw:\\NTPwint1.dot.int.lan:PWMain\Documents\Highway\Bridge\Standards\Bridges\BTIntegralBridges.dgn

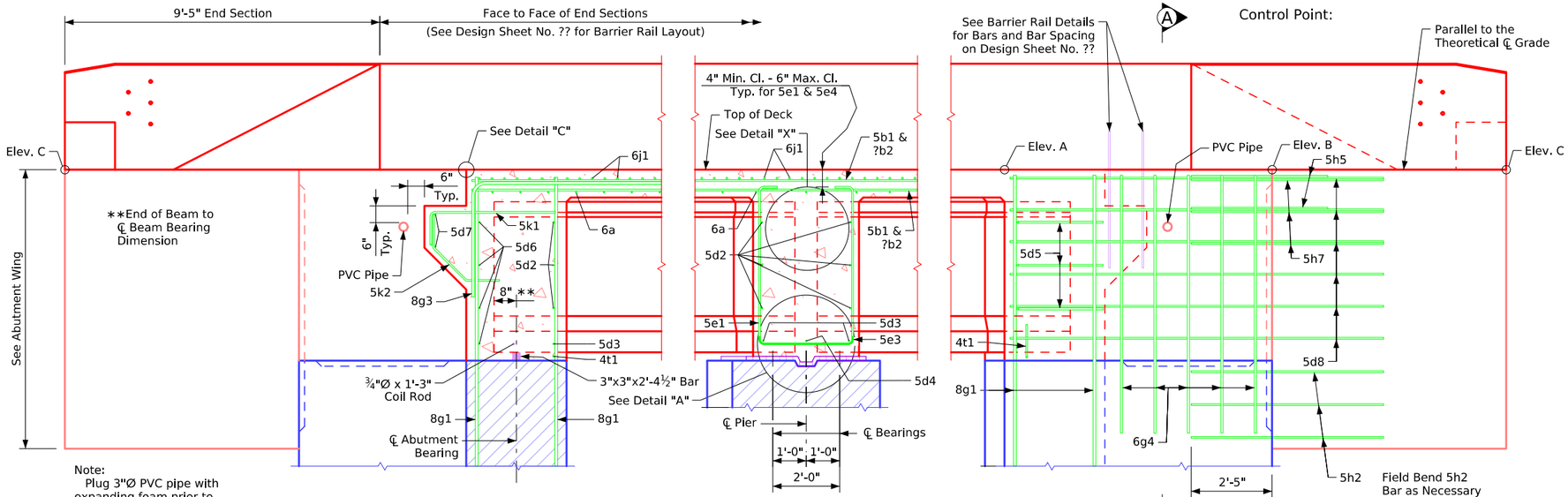

Note:
Plug 3"Ø PVC pipe with expanding foam prior to backfilling behind abutments.

Part Longitudinal Section Near Gutter

(For details of Intermediate Diaphragm see Design Sheet No. ??)

Part End View at Abutment

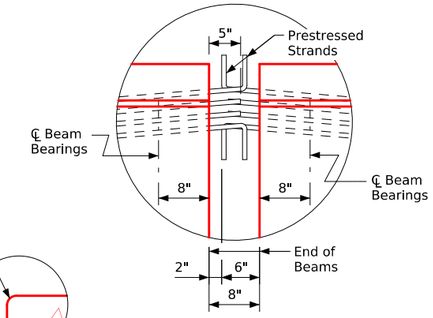

Detail "X"

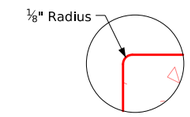

Detail "C"

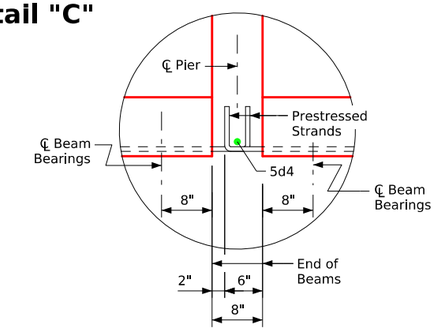

Detail "A"

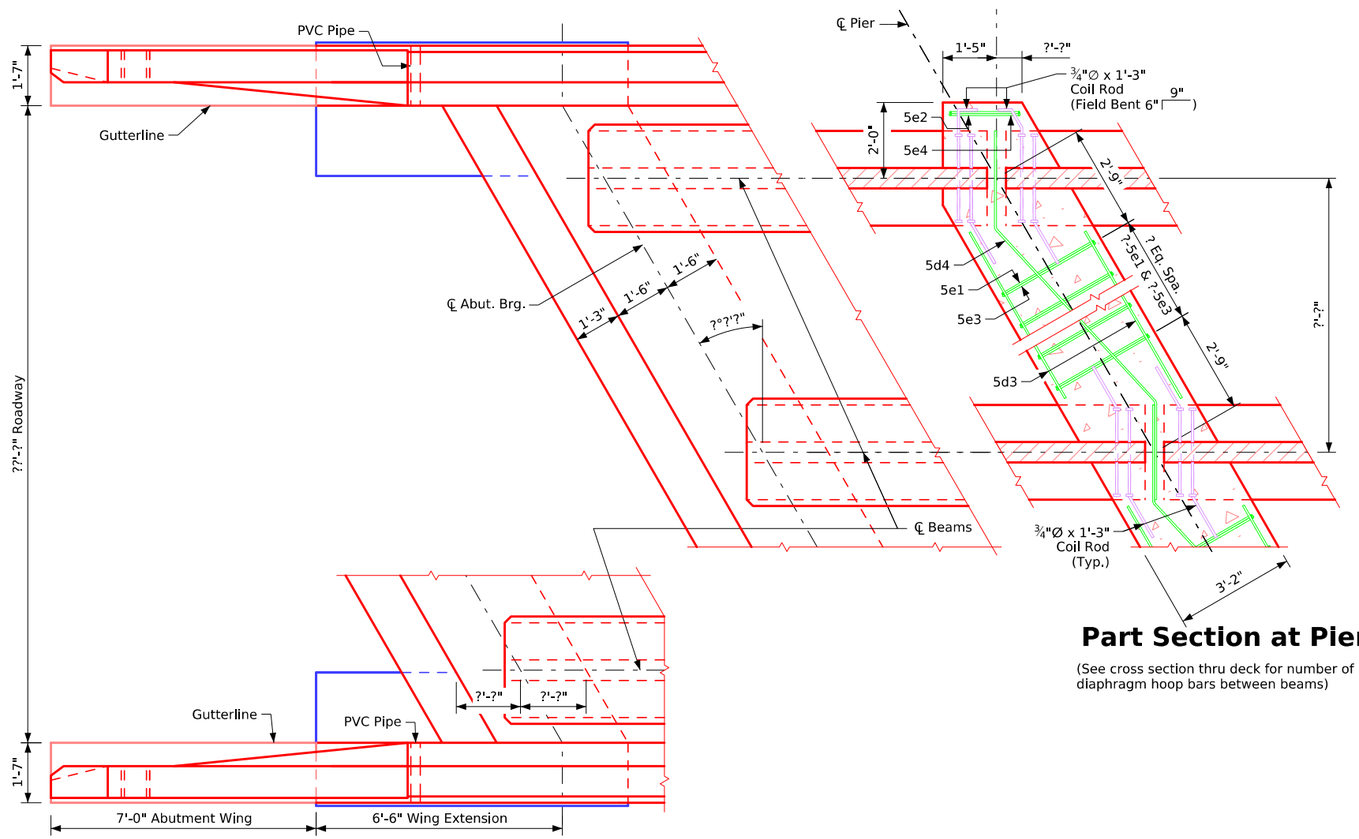

Part Plan

Part Section at Pier

(See cross section thru deck for number of diaphragm hoop bars between beams)

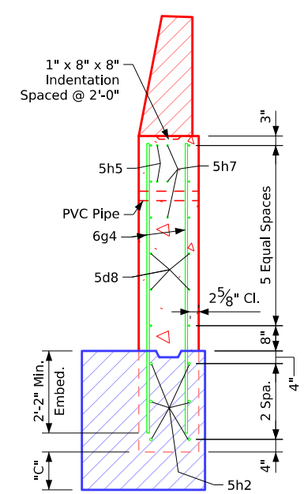

Section A-A

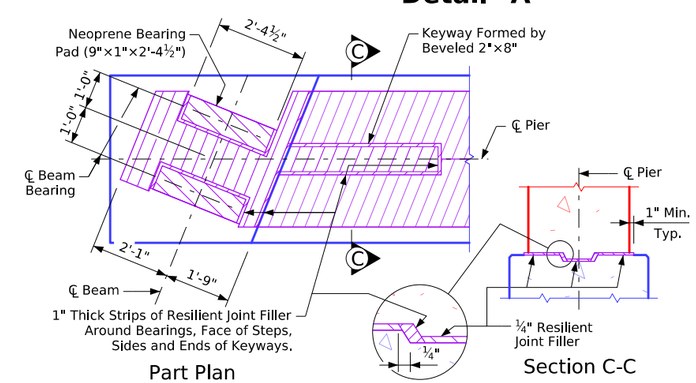

Part Plan

Section C-C

Top of Fixed Pier Details

Table of Wingwall Elevations

Location	Dim "C"	Elev. A	Elev. B	Elev. C
S.W. Corner	?'-?"	???.??	???.??	???.??
N.W. Corner	?'-?"	???.??	???.??	???.??
S.E. Corner	?'-?"	???.??	???.??	???.??
N.E. Corner	?'-?"	???.??	???.??	???.??

Abut. & Pier Diaphragm Details

Revised 01-12: Added Field Bend 5h4 Bar to Avoid Pile in Abutment Wing Note.
Revised 05-2026: Moved location of Detail "C" to upper right of sheet (was in lower center of sheet). In "Section A-A", flipped/switched orientation of horizontal and vertical bars in outside face of wingwall. In "Top of Fixed Pier Details", corrected detailing error of missing hatch pattern. Added "Control Point" text. In "Part Section at Pier" details changed Coil Rod to Field Bent (was labeled Bent).
BTIntegralBridges.dgn - 4513-BTCD - Issued 02-08. This Sheet Re-Issued 11-2023. Sheet Format Update.

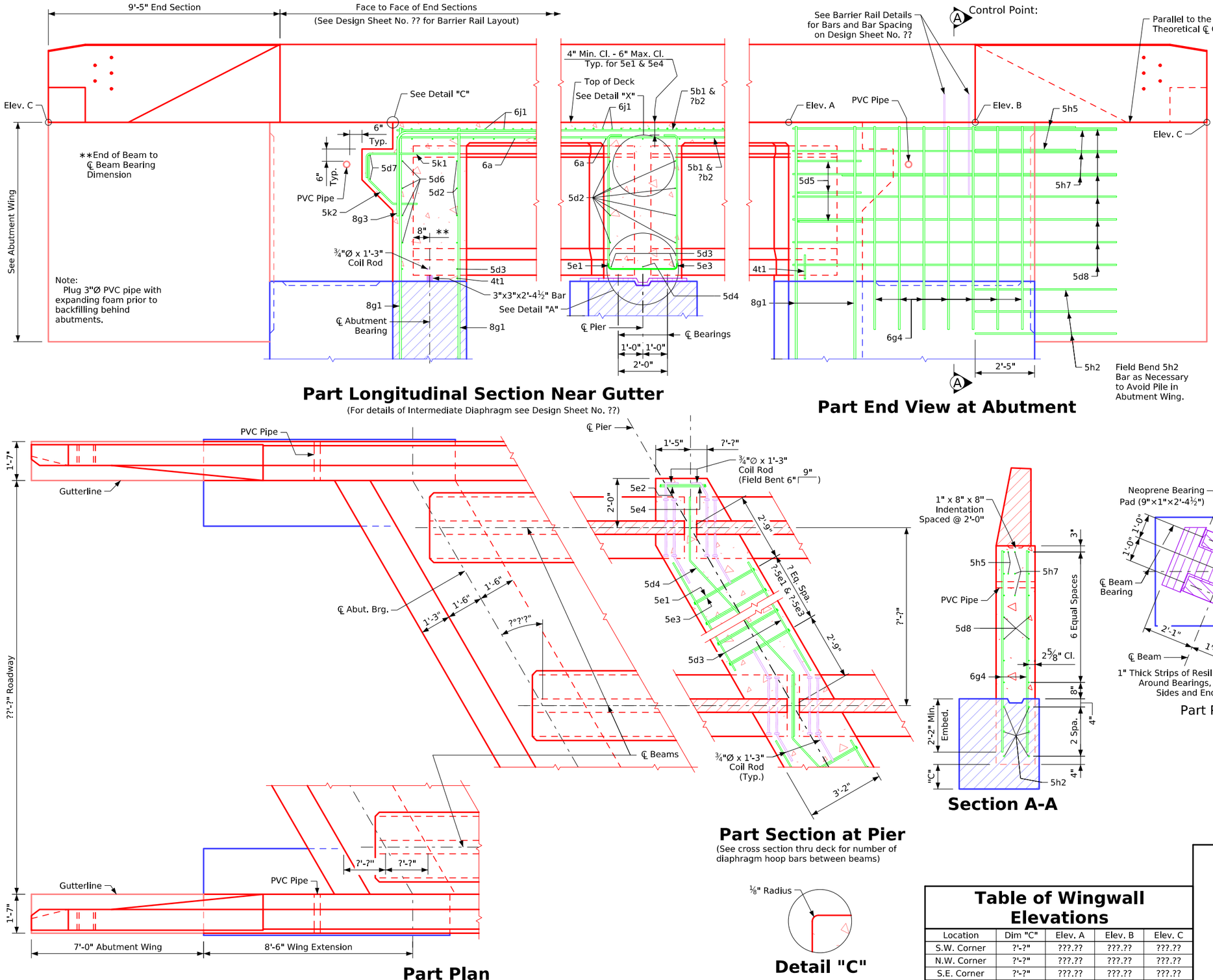

Part Longitudinal Section Near Gutter

(For details of Intermediate Diaphragm see Design Sheet No. ??)

Part End View at Abutment

Detail "X"

Detail "A"

Part Plan

Part Section at Pier

(See cross section thru deck for number of diaphragm hoop bars between beams)

Section A-A

Part Plan

Section C-C

Top of Fixed Pier Details

Detail "C"

Table of Wingwall Elevations

Location	Dim "C"	Elev. A	Elev. B	Elev. C
S.W. Corner	?'-?"	???.??	???.??	???.??
N.W. Corner	?'-?"	???.??	???.??	???.??
S.E. Corner	?'-?"	???.??	???.??	???.??
N.E. Corner	?'-?"	???.??	???.??	???.??

Abut. & Pier Diaphragm Details

Revised 01-12: Added Field Bend 5h4 Bar to Avoid Pile in Abutment Wing Note.
Revised 05-2026: In "Section A-A", flipped/switched orientation of horizontal and vertical bars in outside face of wingwall. In "Top of Fixed Pier Details", corrected detailing error of missing hatch pattern. Added "Control Point" text.
In "Part Section at Pier" details changed Coil Rod to Field Bent (was labeled Bent).
BTIntegralBridges.dgn - 4513-BTE - Issued 02-08. This Sheet Re-Issued 11-2023. Sheet Format Update.

FILE NO.	ENGLISH	DESIGN TEAM	"BTE" Beams - Part Plan & Longitudinal Section - (R,A,) 15°01 - 30° Skew	Standard Sheet 4513-BTE	COUNTY	PROJECT NUMBER	SHEET NUMBER

8:25:56 AM 6/11/2026 bkloss pw:\\NTPwint1.dot.int.lan:PWMain\Documents\Highway\Bridge\Standards\Bridges\BTIntegralBridges.dgn

Bent Bar Details

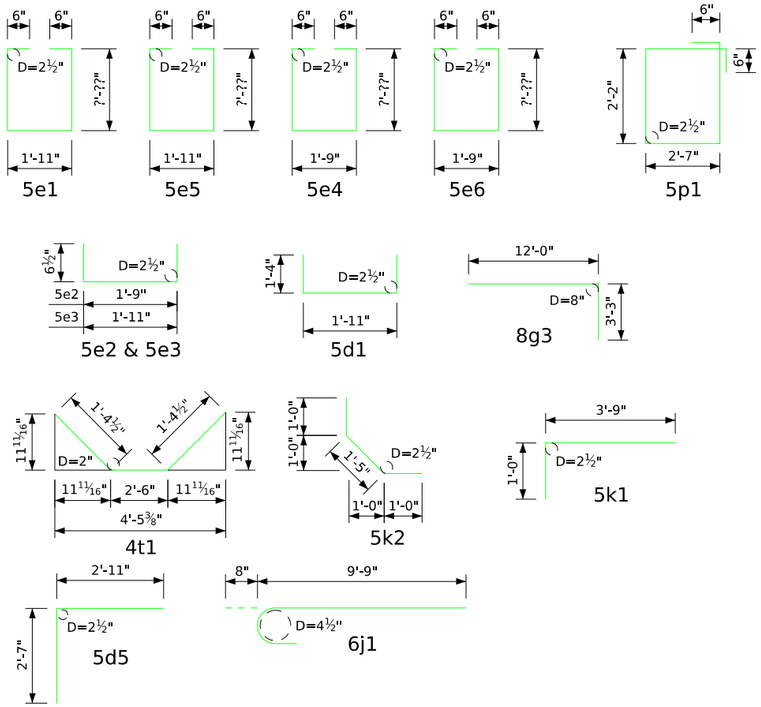

Note: All dimensions are out to out. D= Pin diameter

Non-Coated Reinforcing Steel - Deck, Abutment & Diaphragm

Bar	Location	Shape	No.	Length	Weight
#2	Pile Spiral		??	38'-6"	???
	Spiral Spacers, L⅞" x ⅞" x ⅛" x 0.70		??	1'-10"	???
				Non-Coated Reinforcing Steel Total Weight (lbs.)	???

Concrete Placement Quantities

Location	Quantity
Section 1, Deck & Abut. Diaph.	??.?
Section 2, Deck	??.?
Section 3, Deck & Abut. Diaph.	??.?
Section 4, Deck & Pier Diaph.	??.?
Section 5, Deck & Pier Diaph.	??.?
Total (Cu. Yds.)	??.?

Note: Concrete and Reinforcing Steel Quantities are included on the Summary Quantities Sheet.

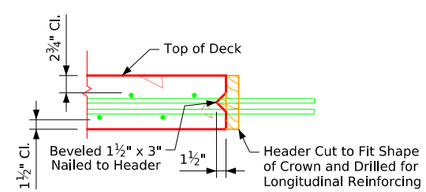

Permissible Transverse Deck Construction Joint

Epoxy Coated Reinforcing Steel - Deck, Abutment & Diaphragm

Bar	Location	Shape	No.	Length	Weight
6a1	Deck Transv. Top		??	??'-?"	???
6a2	Deck Transv. Bott.		??	??'-?"	???
5b1	Deck Longit. Top & Bott.		??	?'-?"	???
?b2	Deck Longit. Top at Piers		??	?'-?"	???
5d1	Pier Diaph. Ends		??	4'-7"	???
5d2	Pier & Abut. Diaph. Longit.		??	?'-?"	???
5d3	Pier & Abut. Diaph. Longit.		??	?'-?"	???
5d4	Pier Diaph. Longit.		??	?'-?"	???
5d5	Abut. Diaph. Ends		8	5'-6"	46
5d6	Abut. Diaph. Longit. B.F.		12	?'-?"	???
5d7	Paving Notch Longit.		8	?'-?"	???
5e1	Pier Diaph. Hoops		??	?'-?"	???
5e2	Pier Diaph. Tie Ends		??	2'-10"	???
5e3	Pier Diaph. Ties		??	3'-0"	???
5e4	Pier Diaph. Hoops Ends		??	?'-?"	???
5e5	Pier Diaph. Hoops Expansion Pier		??	?'-?"	???
5e6	Pier Diaph. Hoops Expansion Pier Ends		??	?'-?"	???
8f1	Abut. Footing Longit. Both F.		36	?'-?"	???
8g1	Abut. Vert. Both F.		??	?'-?"	???
8g3	Abut. Diaph. Vert. B.F.		??	15'-3"	???
5h2	Abut. to Wing Anchor		68	5'-9"	408
5h5	Abut. to Wing Anchor		8	4'-0"	33
6j1	Top of Deck Transv. (at Rail)		??	10'-5"	???
5k1	Paving Notch		??	4'-9"	???
5k2	Paving Notch		??	3'-5"	???
5p1	Abut. Hoops		??	10'-6"	???
4t1	Under Beams at Abutments		??	5'-3"	???
				Epoxy Reinforcing Total Weight (lbs.)	???

Concrete Placement Diagram

Note: Concrete deck shall be placed in sections and sequences indicated. Alternate procedures for placing deck concrete may be submitted for approval together with a statement of the proposed method and evidence that the Contractor possesses the necessary equipment and facilities to accomplish the required results. For approved alternate procedures the Engineer shall determine if a retarding admixture is required to maintain plasticity of the concrete deck during placement.

Deck, Abut. & Diaph. Quantities

Revised 07-15: Changed Concrete Placement Note to Account for the Possible Addition of a Retarding Admixture to the Concrete.
BTIntegralBridges.dgn - 4514-BTB - Issued 02-08. This Sheet Re-Issued 11-2023. Sheet Format Update.

Bent Bar Details

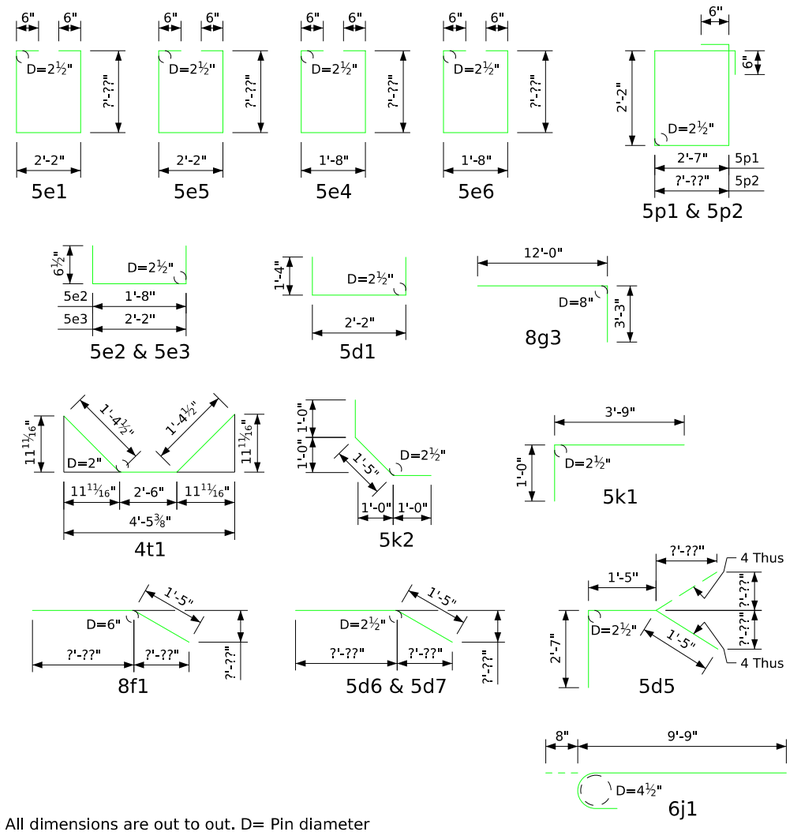

Note: All dimensions are out to out. D= Pin diameter

Non-Coated Reinforcing Steel - Deck, Abutment & Diaphragm

Bar	Location	Shape	No.	Length	Weight
#2	Pile Spiral		??	38'-6"	???
	Spiral Spacers, L⅞" x ⅞" x ⅛" x 0.70		??	1'-10"	???
				Non-Coated Reinforcing Steel Total Weight (lbs.)	???

Concrete Placement Quantities

Location	Quantity
Section 1, Deck & Abut. Diaph.	??.?
Section 2, Deck	??.?
Section 3, Deck & Abut. Diaph.	??.?
Section 4, Deck & Pier Diaph.	??.?
Section 5, Deck & Pier Diaph.	??.?
Total (Cu. Yds.)	??.?

Note: Concrete and Reinforcing Steel Quantities are included on the Summary Quantities Sheet.

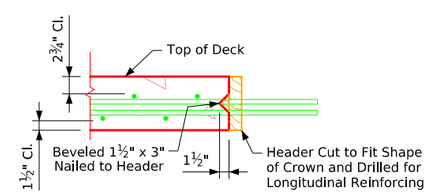

Permissible Transverse Deck Construction Joint

Epoxy Coated Reinforcing Steel - Deck, Abutment & Diaphragm

Bar	Location	Shape	No.	Length	Weight
6a1	Deck Transv. Top		??	??'-?"	???
6a2	Deck Transv. Bott.		??	??'-?"	???
5b1	Deck Longit. Top & Bott.		??	?'-?"	???
?b2	Deck Longit. Top at Piers		??	?'-?"	???
5d1	Pier Diaph. Ends		??	4'-10"	???
5d2	Pier & Abut. Diaph. Longit.		??	?'-?"	???
5d3	Pier & Abut. Diaph. Longit.		??	?'-?"	???
5d4	Pier Diaph. Longit.		??	?'-?"	???
5d5	Abut. Diaph. Ends		8	5'-5"	45
5d6	Abut. Diaph. Longit. B.F.		12	?'-?"	???
5d7	Paving Notch Longit.		8	?'-?"	???
5e1	Pier Diaph. Hoops		??	?'-?"	???
5e2	Pier Diaph. Tie Ends		??	2'-9"	???
5e3	Pier Diaph. Ties		??	3'-3"	???
5e4	Pier Diaph. Hoops Ends		??	?'-?"	???
5e5	Pier Diaph. Hoops Expansion Pier		??	?'-?"	???
5e6	Pier Diaph. Hoops Expansion Pier Ends		??	?'-?"	???
8f1	Abut. Footing Longit. Both F.		36	?'-?"	???
8g1	Abut. Vert. Both F.		??	?'-?"	???
8g3	Abut. Diaph. Vert. B.F.		??	15'-3"	???
5h2	Abut. to Wing Anchor		68	5'-9"	408
5h5	Abut. to Wing Anchor		8	4'-0"	33
6j1	Top of Deck Transv. (at Rail)		??	10'-5"	???
5k1	Paving Notch		??	4'-9"	???
5k2	Paving Notch		??	3'-5"	???
5p1	Abut. Hoops		??	10'-6"	???
5p2	Abut. Hoops at Ends		8	?'-?"	???
4t1	Under Beams at Abutments		??	5'-3"	???
				Epoxy Reinforcing Steel Total Weight (lbs.)	???

Concrete Placement Diagram

Note: Concrete deck shall be placed in sections and sequences indicated. Alternate procedures for placing deck concrete may be submitted for approval together with a statement of the proposed method and evidence that the Contractor possesses the necessary equipment and facilities to accomplish the required results. For approved alternate procedures the Engineer shall determine if a retarding admixture is required to maintain plasticity of the concrete deck during placement.

Deck, Abut. & Diaph. Quantities

Revised 07-15: Changed Concrete Placement Note to Account for the Possible Addition of a Retarding Admixture to the Concrete.
BTIntegralBridges.dgn - 4515-BTB - Issued 02-08. This Sheet Re-Issued 11-2023. Sheet Format Update.

Bent Bar Details

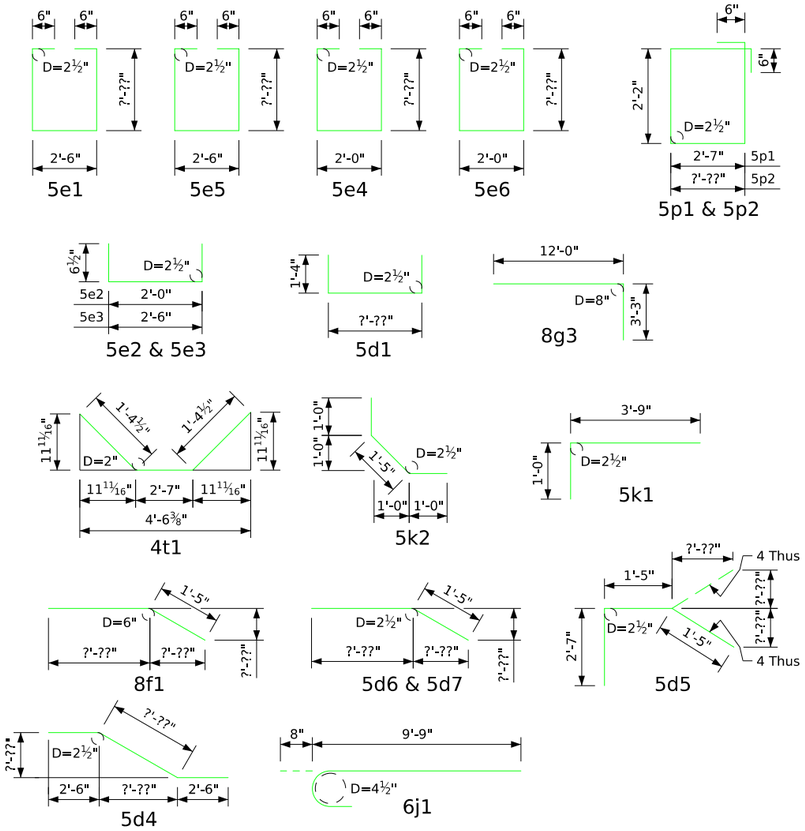

Note: All dimensions are out to out. D= Pin diameter

Non-Coated Reinforcing Steel - Deck, Abutment & Diaphragm

Bar	Location	Shape	No.	Length	Weight
#2	Pile Spiral		??	38'-6"	???
	Spiral Spacers, L⅞" x ⅞" x ⅛" x 0.70		??	1'-10"	???
	Non-Coated Reinforcing Steel Total Weight (lbs.)				???

Concrete Placement Quantities

Location	Quantity
Section 1, Deck & Abut. Diaph.	??.?
Section 2, Deck	??.?
Section 3, Deck & Abut. Diaph.	??.?
Section 4, Deck & Pier Diaph.	??.?
Section 5, Deck & Pier Diaph.	??.?
Total (Cu. Yds.)	??.?

Note: Concrete and Reinforcing Steel Quantities are included on the Summary Quantities Sheet.

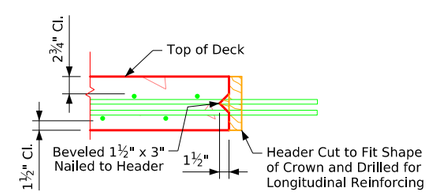

Permissible Transverse Deck Construction Joint

Epoxy Coated Reinforcing Steel - Deck, Abutment & Diaphragm

Bar	Location	Shape	No.	Length	Weight
6a1	Deck Transv. Top		??	??'-?"	???
6a2	Deck Transv. Bott.		??	??'-?"	???
6a3	Deck Transv. Top Ends		??	Varies	???
6a4	Deck Transv. Bott. Ends		??	Varies	???
5b1	Deck Longit. Top & Bott.		??	?'-?"	???
?b2	Deck Longit. Top at Piers		??	?'-?"	???
5d1	Pier Diaph. Ends		??	?'-?"	???
5d2	Pier & Abut. Diaph. Longit.		??	?'-?"	???
5d3	Pier & Abut. Diaph. Longit.		??	?'-?"	???
5d4	Pier Diaph. Longit.		??	?'-?"	???
5d5	Abut. Diaph. Ends		8	5'-5"	45
5d6	Abut. Diaph. Longit. B.F.		12	?'-?"	???
5d7	Paving Notch Longit.		8	?'-?"	???
5e1	Pier Diaph. Hoops		??	?'-?"	???
5e2	Pier Diaph. Tie Ends		??	3'-1"	???
5e3	Pier Diaph. Ties		??	3'-7"	???
5e4	Pier Diaph. Hoops Ends		??	?'-?"	???
5e5	Pier Diaph. Hoops Expansion Pier		??	?'-?"	???
5e6	Pier Diaph. Hoops Expansion Pier Ends		??	?'-?"	???
8f1	Abut. Footing Longit. Both F.		36	?'-?"	???
8g1	Abut. Vert. Both F.		??	?'-?"	???
8g3	Abut. Diaph. Vert. B.F.		??	15'-3"	???
5h2	Abut. to Wing Anchor		68	5'-9"	408
5h5	Abut. to Wing Anchor		8	4'-0"	33
6j1	Top of Deck Transv. (at Rail)		??	10'-5"	???
5k1	Paving Notch		??	4'-9"	???
5k2	Paving Notch		??	3'-5"	???
5p1	Abut. Hoops		??	10'-6"	???
5p2	Abut. Hoops at Ends		8	?'-??"	???
4t1	Under Beams at Abutments		??	5'-4"	???
	Epoxy Reinforcing Steel Total Weight (lbs.)				???

Concrete Placement Diagram

Note: Concrete deck shall be placed in sections and sequences indicated. Alternate procedures for placing deck concrete may be submitted for approval together with a statement of the proposed method and evidence that the Contractor possesses the necessary equipment and facilities to accomplish the required results. For approved alternate procedures the Engineer shall determine if a retarding admixture is required to maintain plasticity of the concrete deck during placement.

Deck, Abut. & Diaph. Quantities

Revised 07-15: Changed Concrete Placement Note to Account for the Possible Addition of a Retarding Admixture to the Concrete.
BTIntegralBridges.dgn - 4516-BTB - Issued 02-08. This Sheet Re-Issued 11-2023. Sheet Format Update.

Bent Bar Details

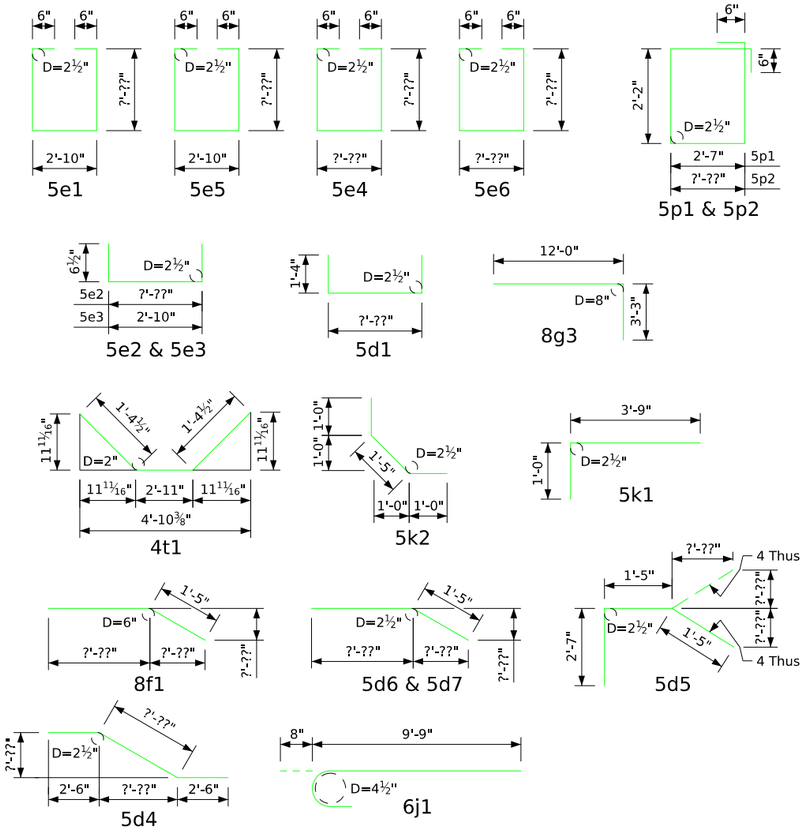

Note: All dimensions are out to out. D= Pin diameter

Non-Coated Reinforcing Steel - Deck, Abutment & Diaphragm

Bar	Location	Shape	No.	Length	Weight
#2	Pile Spiral		??	38'-6"	???
	Spiral Spacers, L⅞" x ⅞" x ⅛" x 0.70		??	1'-10"	???
	Non-Coated Reinforcing Steel Total Weight (lbs.)				???

Concrete Placement Quantities

Location	Quantity
Section 1, Deck & Abut. Diaph.	??.?
Section 2, Deck	??.?
Section 3, Deck & Abut. Diaph.	??.?
Section 4, Deck & Pier Diaph.	??.?
Section 5, Deck & Pier Diaph.	??.?
Total (Cu. Yds.)	??.?

Note: Concrete and Reinforcing Steel Quantities are included on the Summary Quantities Sheet.

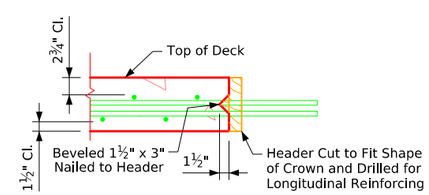

Permissible Transverse Deck Construction Joint

Epoxy Coated Reinforcing Steel - Deck, Abutment & Diaphragm

Bar	Location	Shape	No.	Length	Weight
6a1	Deck Transv. Top		??	??'-?"	???
6a2	Deck Transv. Bott.		??	??'-?"	???
6a3	Deck Transv. Top Ends		??	Varies	???
6a4	Deck Transv. Bott. Ends		??	Varies	???
5b1	Deck Longit. Top & Bott.		??	?'-?"	???
?b2	Deck Longit. Top at Piers		??	?'-?"	???
5d1	Pier Diaph. Ends		??	?'-?"	???
5d2	Pier & Abut. Diaph. Longit.		??	?'-?"	???
5d3	Pier & Abut. Diaph. Longit.		??	?'-?"	???
5d4	Pier Diaph. Longit.		??	?'-?"	???
5d5	Abut. Diaph. Ends		8	5'-5"	45
5d6	Abut. Diaph. Longit. B.F.		12	?'-?"	???
5d7	Paving Notch Longit.		8	?'-?"	???
5e1	Pier Diaph. Hoops		??	?'-?"	???
5e2	Pier Diaph. Tie Ends		??	?'-?"	???
5e3	Pier Diaph. Ties		??	3'-11"	???
5e4	Pier Diaph. Hoops Ends		??	?'-?"	???
5e5	Pier Diaph. Hoops Expansion Pier		??	?'-?"	???
5e6	Pier Diaph. Hoops Expansion Pier Ends		??	?'-?"	???
8f1	Abut. Footing Longit. Both F.		36	?'-?"	???
8g1	Abut. Vert. Both F.		??	?'-?"	???
8g3	Abut. Diaph. Vert. B.F.		??	15'-3"	???
5h2	Abut. to Wing Anchor		68	5'-9"	408
5h5	Abut. to Wing Anchor		8	4'-0"	33
6j1	Top of Deck Transv. (at Rail)		??	10'-5"	???
5k1	Paving Notch		??	4'-9"	???
5k2	Paving Notch		??	3'-5"	???
5p1	Abut. Hoops		??	10'-6"	???
5p2	Abut. Hoops at Ends		8	?'-?"	???
4t1	Under Beams at Abutments		??	5'-8"	???
	Epoxy Reinforcing Steel Total Weight (lbs.)				???

Concrete Placement Diagram

Note: Concrete deck shall be placed in sections and sequences indicated. Alternate procedures for placing deck concrete may be submitted for approval together with a statement of the proposed method and evidence that the Contractor possesses the necessary equipment and facilities to accomplish the required results. For approved alternate procedures the Engineer shall determine if a retarding admixture is required to maintain plasticity of the concrete deck during placement.

Deck, Abut. & Diaph. Quantities

Revised 07-2015: Changed Concrete Placement Note to Account for the Possible Addition of a Retarding Admixture to the Concrete.
Revised 05-2026: In Epoxy Coated Rebar list, changed 5e2 bar length to ?'-?" (was incorrectly showing 3'-11"), also changed 5e3 bar length to 3'-11" (was incorrectly showing ?'-?").
BTIntegralBridges.dgn - 4517-BTB - Issued 02-08. This Sheet Re-Issued 11-2023. Sheet Format Update.

Bent Bar Details

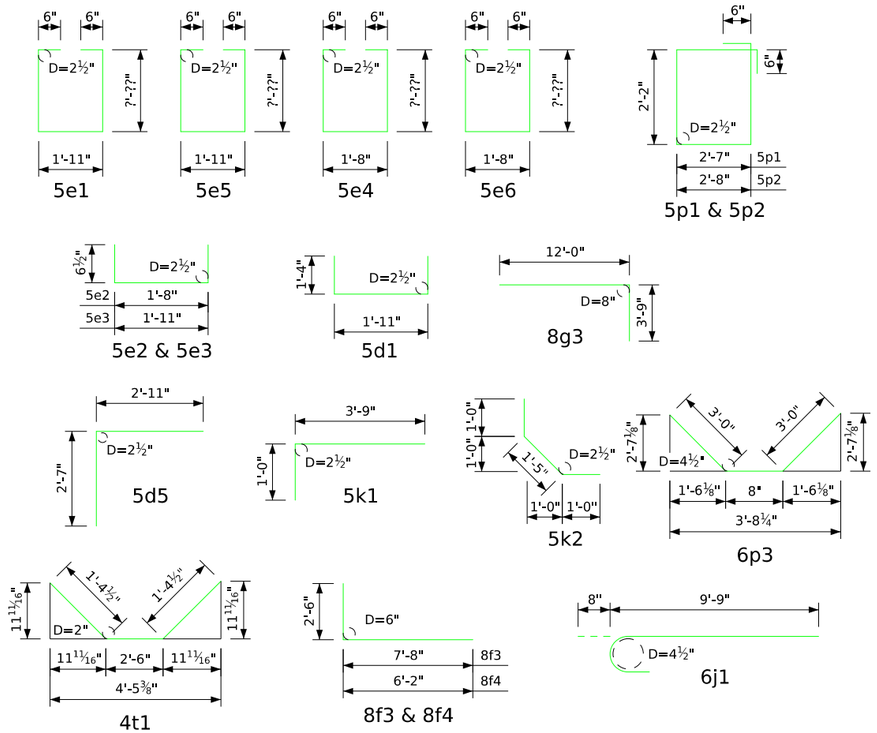

Note: All dimensions are out to out. D= Pin diameter

Non-Coated Reinforcing Steel - Deck, Abutment & Diaphragm

Bar	Location	Shape	No.	Length	Weight
#2	Pile Spiral		??	38'-6"	???
	Spiral Spacers, L⅞" x ⅞" x ⅛" x 0.70		??	1'-10"	???
	Non-Coated Reinforcing Steel Total Weight (lbs.)				???

Concrete Placement Quantities

Location	Quantity
Section 1, Deck & Abut. Diaph.	??.?
Section 2, Deck	??.?
Section 3, Deck & Abut. Diaph.	??.?
Section 4, Deck & Pier Diaph.	??.?
Section 5, Deck & Pier Diaph.	??.?
Total (Cu. Yds.)	??.?

Note: Concrete and Reinforcing Steel Quantities are included on the Summary Quantities Sheet.

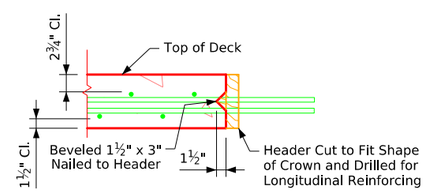

Permissible Transverse Deck Construction Joint

Epoxy Coated Reinforcing Steel - Deck, Abutment & Diaphragm

Bar	Location	Shape	No.	Length	Weight
6a1	Deck Transv. Top		??	??'-?"	???
6a2	Deck Transv. Bott.		??	??'-?"	???
5b1	Deck Longit. Top & Bott.		??	?'-?"	???
?b2	Deck Longit. Top at Piers		??	?'-?"	???
5d1	Pier Diaph. Ends		??	4'-7"	???
5d2	Pier & Abut. Diaph. Longit.		??	?'-?"	???
5d3	Pier & Abut. Diaph. Longit.		??	?'-?"	???
5d4	Pier Diaph. Longit.		??	?'-?"	???
5d5	Abut. Diaph. Ends		12	5'-6"	69
5d6	Abut. Diaph. Longit. B.F.		16	?'-?"	???
5d7	Paving Notch Longit.		8	?'-?"	???
5d8	Abut. Diaph. Wing. Longit.		48	10'-8"	534
5e1	Pier Diaph. Hoops		??	?'-?"	???
5e2	Pier Diaph. Tie Ends		??	2'-9"	???
5e3	Pier Diaph. Ties		??	3'-0"	???
5e4	Pier Diaph. Hoops Ends		??	?'-?"	???
5e5	Pier Diaph. Hoops Expansion Pier		??	?'-?"	???
5e6	Pier Diaph. Hoops Expansion Pier Ends		??	?'-?"	???
8f1	Abut. Footing Longit. Both F.		36	?'-?"	???
8f3	Abut. Extension Longit.		16	10'-2"	434
8f4	Abut. Extension Longit.		16	8'-8"	370
8g1	Abut. Vert. Both F.		??	?'-?"	???
8g3	Abut. Diaph. Vert. B.F.		??	15'-9"	???
6g4	Abut. Diaph. Wing. Ext. Vert.		40	?'-?"	???
5h2	Abut. to Wing Anchor		24	5'-9"	144
5h5	Abut. to Wing Anchor		8	4'-0"	33
5h7	Abut. to Wing Anchor		12	5'-9"	72
6j1	Top of Deck Transv. (at Rail)		??	10'-5"	???
5k1	Paving Notch		??	4'-9"	???
5k2	Paving Notch		??	3'-5"	???
5p1	Abut. Hoops		??	10'-6"	???
5p2	Abut. Extension Hoops		24	10'-8"	267
6p3	Abut. Bott. at Piles		??	6'-8"	???
4t1	Under Beams at Abutments		??	5'-3"	???
	Epoxy Reinforcing Steel Total Weight (lbs.)				???

Concrete Placement Diagram

Note: Concrete deck shall be placed in sections and sequences indicated. Alternate procedures for placing deck concrete may be submitted for approval together with a statement of the proposed method and evidence that the Contractor possesses the necessary equipment and facilities to accomplish the required results. For approved alternate procedures the Engineer shall determine if a retarding admixture is required to maintain plasticity of the concrete deck during placement.

Deck, Abut. & Diaph. Quantities

Revised 07-15: Changed Concrete Placement Note to account for the possible addition of a retarding admixture to the concrete.
BTIntegralBridges.dgn - 4518-BTCD - Issued 02-08. This Sheet Re-Issued 11-2023. Sheet Format Update.

Bent Bar Details

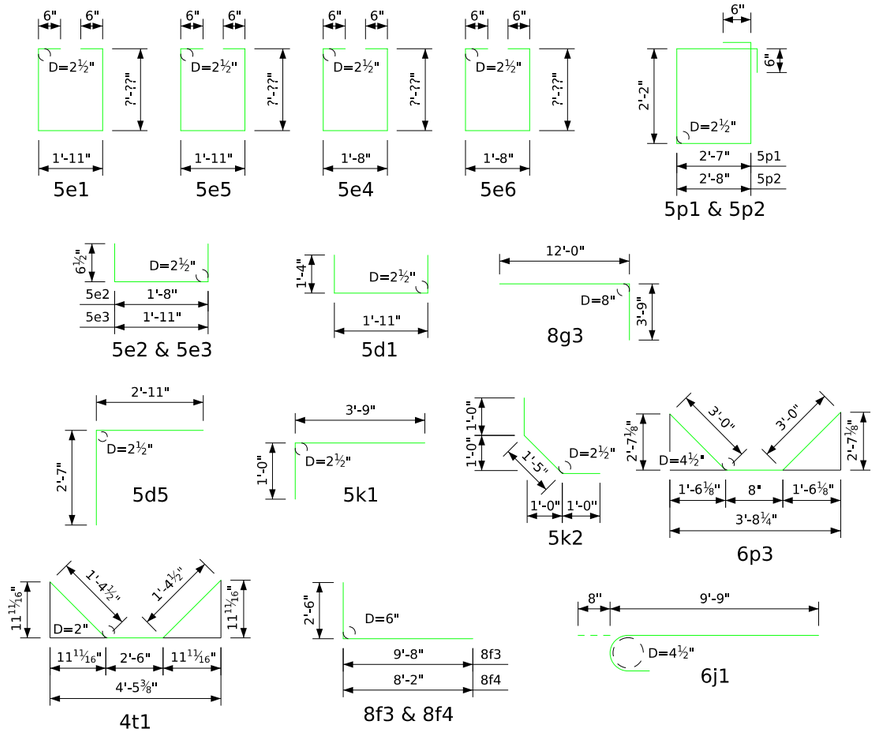

Note: All dimensions are out to out. D= Pin diameter

Non-Coated Reinforcing Steel - Deck, Abutment & Diaphragm

Bar	Location	Shape	No.	Length	Weight
#2	Pile Spiral		??	38'-6"	???
	Spiral Spacers, L⅞" x ⅞" x ⅛" x 0.70		??	1'-10"	???
	Non-Coated Reinforcing Steel Total Weight (lbs.)				???

Concrete Placement Quantities

Location	Quantity
Section 1, Deck & Abut. Diaph.	??.?
Section 2, Deck	??.?
Section 3, Deck & Abut. Diaph.	??.?
Section 4, Deck & Pier Diaph.	??.?
Section 5, Deck & Pier Diaph.	??.?
Total (Cu. Yds.)	??.?

Note: Concrete and Reinforcing Steel Quantities are included on the Summary Quantities Sheet.

Epoxy Coated Reinforcing Steel - Deck, Abutment & Diaphragm

Bar	Location	Shape	No.	Length	Weight
6a1	Deck Transv. Top		??	??'-?"	???
6a2	Deck Transv. Bott.		??	??'-?"	???
5b1	Deck Longit. Top & Bott.		??	?'-?"	???
?b2	Deck Longit. Top at Piers		??	?'-?"	???
5d1	Pier Diaph. Ends		??	4'-7"	???
5d2	Pier & Abut. Diaph. Longit.		??	?'-?"	???
5d3	Pier & Abut. Diaph. Longit.		??	?'-?"	???
5d4	Pier Diaph. Longit.		??	?'-?"	???
5d5	Abut. Diaph. Ends		16	5'-6"	92
5d6	Abut. Diaph. Longit. B.F.		20	?'-?"	???
5d7	Paving Notch Longit.		8	?'-?"	???
5d8	Abut. Diaph. Wing Longit.		56	12'-8"	740
5e1	Pier Diaph. Hoops		??	?'-?"	???
5e2	Pier Diaph. Tie Ends		??	2'-9"	???
5e3	Pier Diaph. Ties		??	3'-0"	???
5e4	Pier Diaph. Hoops Ends		??	?'-?"	???
5e5	Pier Diaph. Hoops Expansion Pier		??	?'-?"	???
5e6	Pier Diaph. Hoops Expansion Pier Ends		??	?'-?"	???
8f1	Abut. Footing Longit. Both F.		36	?'-?"	???
8f3	Abut. Extension Longit.		16	12'-2"	520
8f4	Abut. Extension Longit.		16	10'-8"	456
8g1	Abut. Vert. Both F.		??	?'-?"	???
8g3	Abut. Diaph. Vert. B.F.		??	15'-9"	???
6g4	Abut. Diaph. Wing Ext. Vert.		56	?'-?"	???
5h2	Abut. to Wing Anchor		24	5'-9"	144
5h5	Abut. to Wing Anchor		8	4'-0"	33
5h7	Abut. to Wing Anchor		12	5'-9"	72
6j1	Top of Deck Transv. (at Rail)		??	10'-5"	???
5k1	Paving Notch		??	4'-9"	???
5k2	Paving Notch		??	3'-5"	???
5p1	Abut. Hoops		??	10'-6"	???
5p2	Abut. Extension Hoops		40	10'-8"	445
6p3	Abut. Bott. at Piles		??	6'-8"	???
4t1	Under Beams at Abutments		??	5'-3"	???
	Epoxy Reinforcing Steel Total Weight (lbs.)				???

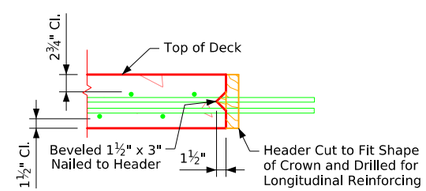

Permissible Transverse Deck Construction Joint

Concrete Placement Diagram

Note: Concrete deck shall be placed in sections and sequences indicated. Alternate procedures for placing deck concrete may be submitted for approval together with a statement of the proposed method and evidence that the Contractor possesses the necessary equipment and facilities to accomplish the required results. For approved alternate procedures the Engineer shall determine if a retarding admixture is required to maintain plasticity of the concrete deck during placement.

Deck, Abut. & Diaph. Quantities

Revised 07-15: Changed Concrete Placement Note to Account for the Possible Addition of a Retarding Admixture to the Concrete.
BTIntegralBridges.dgn - 4518-BTE - Issued 02-08. This Sheet Re-Issued 11-2023. Sheet Format Update.

Bent Bar Details

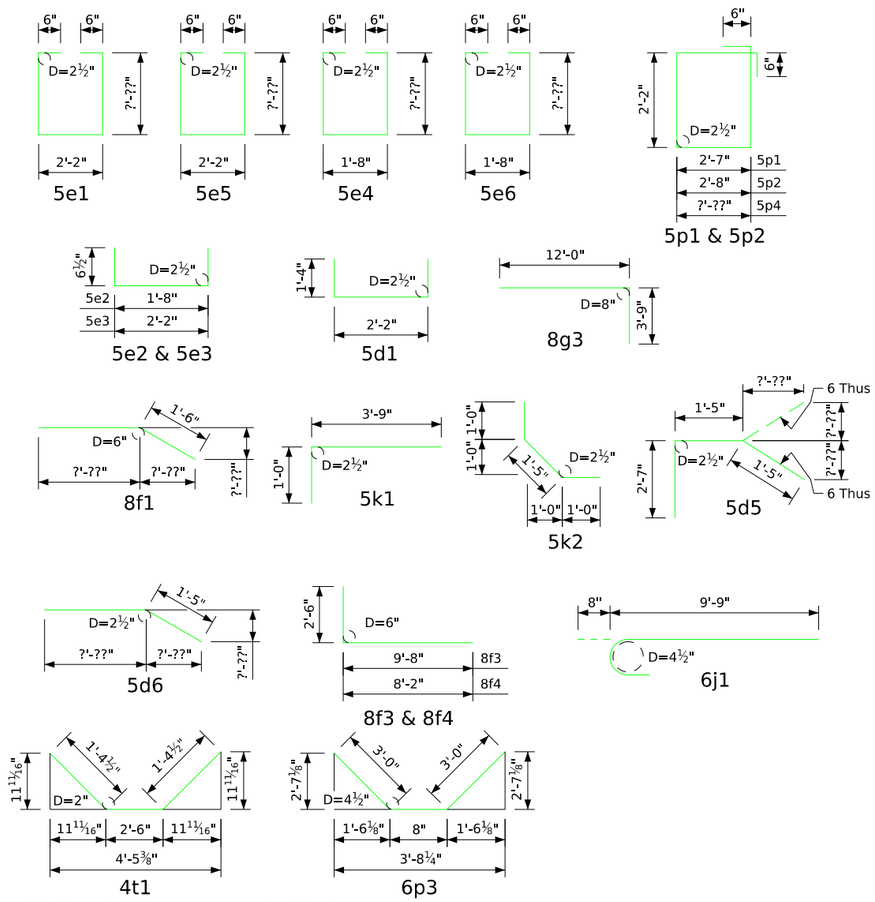

Note: All dimensions are out to out. D= Pin diameter

Non-Coated Reinforcing Steel - Deck, Abutment & Diaphragm

Bar	Location	Shape	No.	Length	Weight
#2	Pile Spiral		??	38'-6"	???
	Spiral Spacers, L⅞" x ⅞" x ⅛" x 0.70		??	1'-10"	???
				Non-Coated Reinforcing Steel Total Weight (lbs.)	???

Concrete Placement Quantities

Location	Quantity
Section 1, Deck & Abut. Diaph.	??.?
Section 2, Deck	??.?
Section 3, Deck & Abut. Diaph.	??.?
Section 4, Deck & Pier Diaph.	??.?
Section 5, Deck & Pier Diaph.	??.?
Total (Cu. Yds.)	??.?

Note: Concrete and Reinforcing Steel Quantities are included on the Summary Quantities Sheet.

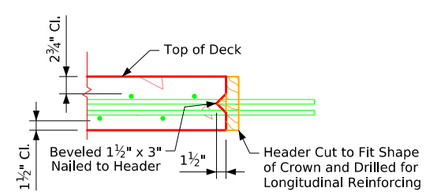

Permissible Transverse Deck Construction Joint

Epoxy Coated Reinforcing Steel - Deck, Abutment & Diaphragm

Bar	Location	Shape	No.	Length	Weight
6a1	Deck Transv. Top		??	??'-?"	???
6a2	Deck Transv. Bott.		??	??'-?"	???
5b1	Deck Longit. Top & Bott.		??	?'-?"	???
?b2	Deck Longit. Top at Piers		??	?'-?"	???
5d1	Pier Diaph. Ends		??	4'-10"	???
5d2	Pier & Abut. Diaph. Longit.		??	?'-?"	???
5d3	Pier & Abut. Diaph. Longit.		??	?'-?"	???
5d4	Pier Diaph. Longit.		??	?'-?"	???
5d5	Abut. Diaph. Ends		12	5'-5"	68
5d6	Abut. Diaph. Longit. B.F.		16	?'-?"	???
5d7	Paving Notch Longit.		8	?'-?"	???
5d8	Abut. Diaph. Wing Longit.		48	10'-8"	534
5e1	Pier Diaph. Hoops		??	?'-?"	???
5e2	Pier Diaph. Tie Ends		??	2'-9"	???
5e3	Pier Diaph. Ties		??	3'-3"	???
5e4	Pier Diaph. Hoops Ends		??	?'-?"	???
5e5	Pier Diaph. Hoops Expansion Pier		??	?'-?"	???
5e6	Pier Diaph. Hoops Expansion Pier Ends		??	?'-?"	???
8f1	Abut. Footing Longit. Both F.		36	?'-?"	???
8f3	Abut. Extension Longit.		16	?'-?"	???
8f4	Abut. Extension Longit.		8	?'-?"	???
8f5	Abut. Extension Longit.		8	?'-?"	???
8g1	Abut. Vert. Both F.		??	?'-?"	???
8g3	Abut. Diaph. Vert. B.F.		??	15'-9"	???
6g4	Abut. Diaph. Wing Ext. Vert.		40	?'-?"	???
5h2	Abut. to Wing Anchor		24	5'-9"	144
5h5	Abut. to Wing Anchor		8	4'-0"	33
5h7	Abut. to Wing Anchor		12	5'-9"	72
6j1	Top of Deck Transv. (at Rail)		??	10'-5"	???
5k1	Paving Notch		??	4'-9"	???
5k2	Paving Notch		??	3'-5"	???
5p1	Abut. Hoops		??	10'-6"	???
5p2	Abut. Extension Hoops		24	10'-8"	267
6p3	Abut. Bott. at Piles		??	6'-8"	???
5p4	Abut. Hoops at Ends		8	?'-?"	???
4t1	Under Beams at Abutments		??	5'-3"	???
				Epoxy Reinforcing Total Weight (lbs.)	???

Concrete Placement Diagram

Note: Concrete deck shall be placed in sections and sequences indicated. Alternate procedures for placing deck concrete may be submitted for approval together with a statement of the proposed method and evidence that the Contractor possesses the necessary equipment and facilities to accomplish the required results. For approved alternate procedures the Engineer shall determine if a retarding admixture is required to maintain plasticity of the concrete deck during placement.

Deck, Abut. & Diaph. Quantities

Revised 07-15: Changed Concrete Placement Note to Account for the Possible Addition of a Retarding Admixture to the Concrete.
BTIntegralBridges.dgn - 451-BTCD - Issued 02-08. This Sheet Re-Issued 11-2023. Sheet Format Update.

Bent Bar Details

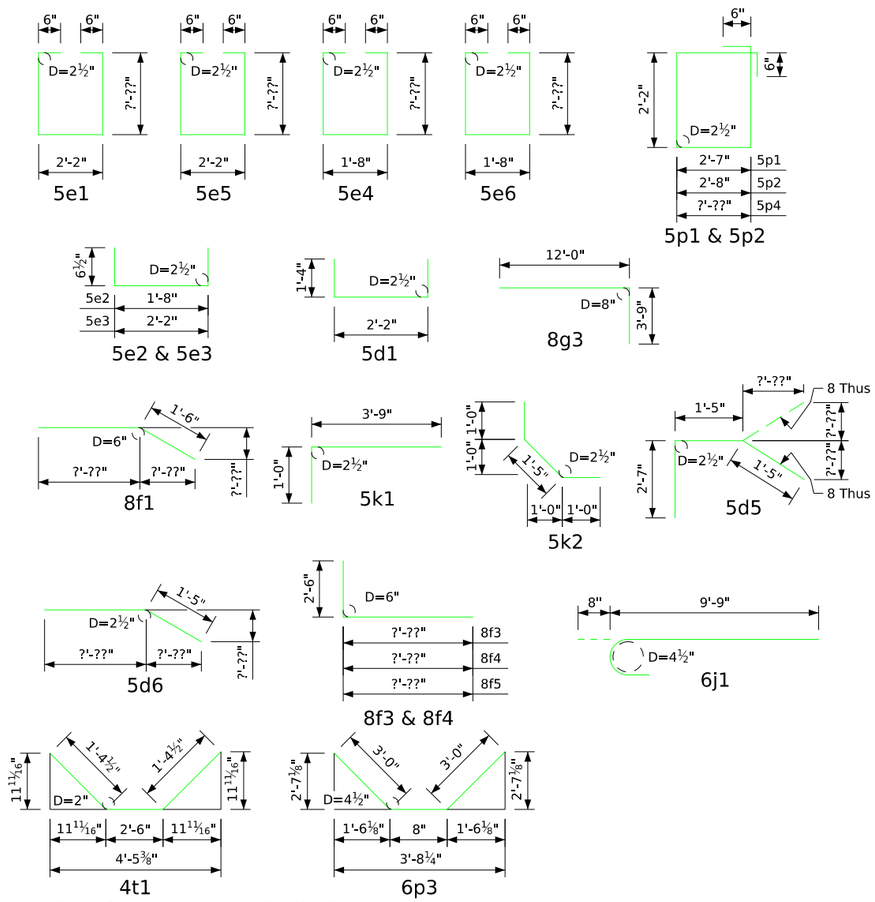

Note: All dimensions are out to out. D= Pin diameter

Non-Coated Reinforcing Steel - Deck, Abutment & Diaphragm

Bar	Location	Shape	No.	Length	Weight
#2	Pile Spiral		??	38'-6"	???
	Spiral Spacers, L⅞" x ⅞" x ⅛" x 0.70		??	1'-10"	???
				Non-Coated Reinforcing Steel Total Weight (lbs.)	???

Concrete Placement Quantities

Location	Quantity
Section 1, Deck & Abut. Diaph.	??.?
Section 2, Deck	??.?
Section 3, Deck & Abut. Diaph.	??.?
Section 4, Deck & Pier Diaph.	??.?
Section 5, Deck & Pier Diaph.	??.?
Total (Cu. Yds.)	??.?

Note: Concrete and Reinforcing Steel Quantities are included on the Summary Quantities Sheet.

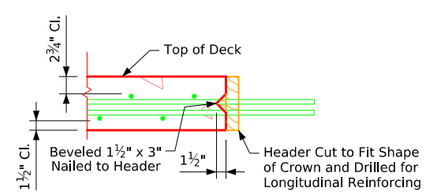

Permissible Transverse Deck Construction Joint

Epoxy Coated Reinforcing Steel - Deck, Abutment & Diaphragm

Bar	Location	Shape	No.	Length	Weight
6a1	Deck Transv. Top		??	??'-?"	???
6a2	Deck Transv. Bott.		??	??'-?"	???
5b1	Deck Longit. Top & Bott.		??	?'-?"	???
?b2	Deck Longit. Top at Piers		??	?'-?"	???
5d1	Pier Diaph. Ends		??	4'-10"	???
5d2	Pier & Abut. Diaph. Longit.		??	?'-?"	???
5d3	Pier & Abut. Diaph. Longit.		??	?'-?"	???
5d4	Pier Diaph. Longit.		??	?'-?"	???
5d5	Abut. Diaph. Ends		16	5'-5"	90
5d6	Abut. Diaph. Longit. B.F.		20	?'-?"	???
5d7	Paving Notch Longit.		8	?'-?"	???
5d8	Abut. Diaph. Wing Longit.		56	12'-8"	740
5e1	Pier Diaph. Hoops		??	?'-?"	???
5e2	Pier Diaph. Tie Ends		??	?'-?"	???
5e3	Pier Diaph. Ties		??	2'-9"	???
5e4	Pier Diaph. Hoops Ends		??	3'-3"	???
5e5	Pier Diaph. Hoops Expansion Pier		??	?'-?"	???
5e6	Pier Diaph. Hoops Expansion Pier Ends		??	?'-?"	???
8f1	Abut. Footing Longit. Both F.		36	?'-?"	???
8f3	Abut. Extension Longit.		16	?'-?"	???
8f4	Abut. Extension Longit.		8	?'-?"	???
8f5	Abut. Extension Longit.		8	?'-?"	???
8g1	Abut. Vert. Both F.		??	?'-?"	???
8g3	Abut. Diaph. Vert. B.F.		??	15'-9"	???
8g4	Abut. Diaph. Wing Ext. Vert.		56	?'-?"	???
5h2	Abut. to Wing Anchor		24	5'-9"	144
5h5	Abut. to Wing Anchor		8	4'-0"	33
5h7	Abut. to Wing Anchor		12	5'-9"	72
6j1	Top of Deck Transv. (at Rail)		??	10'-5"	???
5k1	Paving Notch		??	4'-9"	???
5k2	Paving Notch		??	3'-5"	???
5p1	Abut. Hoops		??	10'-6"	???
5p2	Abut. Extension Hoops		40	10'-8"	445
6p3	Abut. Bott. at Piles		??	6'-8"	???
5p4	Abut. Hoops at Ends		8	?'-?"	???
4t1	Under Beams at Abutments		??	5'-3"	???
				Epoxy Reinforcing Total Weight (lbs.)	???

Concrete Placement Diagram

Note: Concrete deck shall be placed in sections and sequences indicated. Alternate procedures for placing deck concrete may be submitted for approval together with a statement of the proposed method and evidence that the Contractor possesses the necessary equipment and facilities to accomplish the required results. For approved alternate procedures the Engineer shall determine if a retarding admixture is required to maintain plasticity of the concrete deck during placement.

Deck, Abut. & Diaph. Quantities

Revised 07-15: Changed Concrete Placement Note to Account for the Possible Addition of a Retarding Admixture to the Concrete.
BTIntegralBridges.dgn - 4519-BTE - Issued 02-08. This Sheet Re-Issued 11-2023. Sheet Format Update.

Bent Bar Details

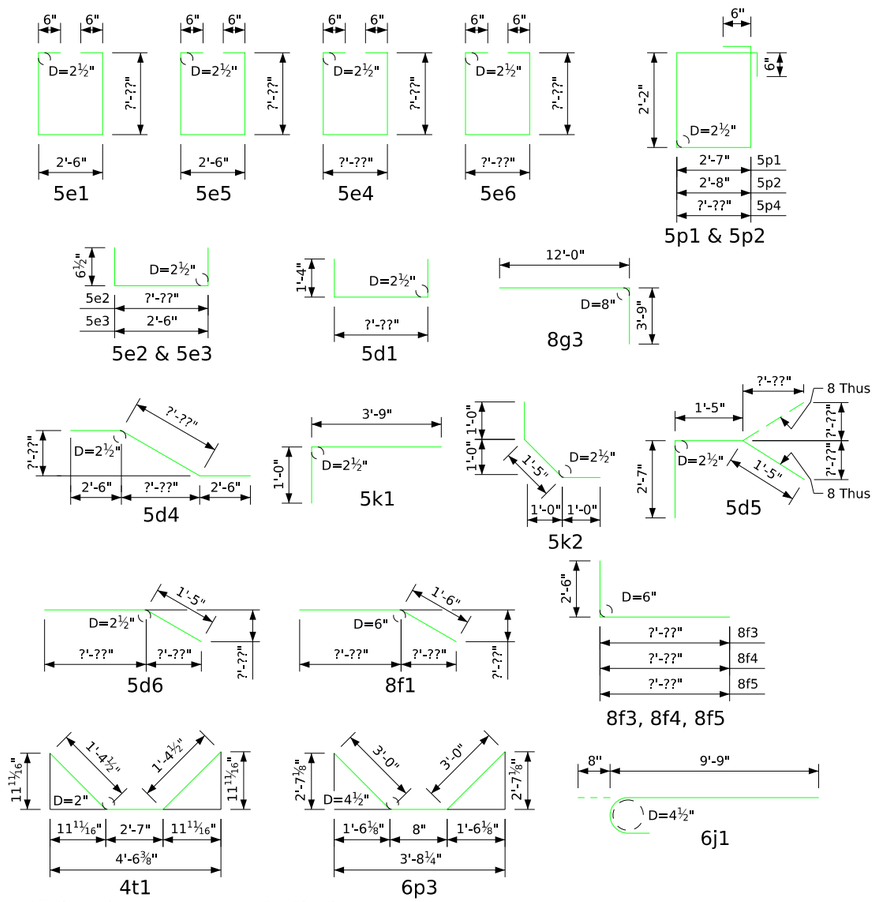

Note: All dimensions are out to out. D= Pin diameter

Non-Coated Reinforcing Steel - Deck, Abutment & Diaphragm

Bar	Location	Shape	No.	Length	Weight
#2	Pile Spiral		??	38'-6"	???
	Spiral Spacers, L⅞" x ⅞" x ⅛" x 0.70		??	1'-10"	???
	Non-Coated Reinforcing Steel Total Weight (lbs.)				???

Concrete Placement Quantities

Location	Quantity
Section 1, Deck & Abut. Diaph.	??.?
Section 2, Deck	??.?
Section 3, Deck & Abut. Diaph.	??.?
Section 4, Deck & Pier Diaph.	??.?
Section 5, Deck & Pier Diaph.	??.?
Total (Cu. Yds.)	??.?

Note: Concrete and Reinforcing Steel Quantities are included on the Summary Quantities Sheet.

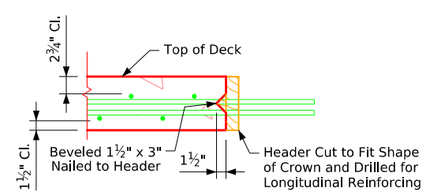

Permissible Transverse Deck Construction Joint

Epoxy Coated Reinforcing Steel - Deck, Abutment & Diaphragm

Bar	Location	Shape	No.	Length	Weight
6a1	Deck Transv. Top		??	??'-?"	???
6a2	Deck Transv. Bott.		??	??'-?"	???
6a3	Deck Transv. Top Ends		??	Varies	???
6a4	Deck Transv. Bott. Ends		??	Varies	???
5b1	Deck Longit. Top & Bott.		??	?'-?"	???
?b2	Deck Longit. Top at Piers		??	?'-?"	???
5d1	Pier Diaph. Ends		??	?'-?"	???
5d2	Pier & Abut. Diaph. Longit.		??	?'-?"	???
5d3	Pier & Abut. Diaph. Longit.		??	?'-?"	???
5d4	Pier Diaph. Longit.		??	?'-?"	???
5d5	Abut. Diaph. Ends		12	5'-5"	68
5d6	Abut. Diaph. Longit. B.F.		16	?'-?"	???
5d7	Paving Notch Longit.		8	?'-?"	???
5d8	Abut. Diaph. Wing Longit.		48	10'-8"	534
5e1	Pier Diaph. Hoops		??	?'-?"	???
5e2	Pier Diaph. Tie Ends		??	?'-?"	???
5e3	Pier Diaph. Ties		??	3'-7"	???
5e4	Pier Diaph. Hoops Ends		??	?'-?"	???
5e5	Pier Diaph. Hoops Expansion Pier		??	?'-?"	???
5e6	Pier Diaph. Hoops Expansion Pier Ends		??	?'-?"	???
8f1	Abut. Footing Longit. Both F.		36	?'-?"	???
8f3	Abut. Extension Longit.		16	?'-?"	???
8f4	Abut. Extension Longit.		8	?'-?"	???
8f5	Abut. Extension Longit.		8	?'-?"	???
8g1	Abut. Vert. Both F.		??	?'-?"	???
8g3	Abut. Diaph. Vert. B.F.		??	15'-9"	???
6g4	Abut. Diaph. Wing Ext. Vert.		40	?'-?"	???
5h2	Abut. to Wing Anchor		24	5'-9"	144
5h5	Abut. to Wing Anchor		8	4'-0"	33
5h7	Abut. to Wing Anchor		12	5'-9"	72
6j1	Top of Deck Transv. (at Rail)		??	10'-5"	???
5k1	Paving Notch		??	4'-9"	???
5k2	Paving Notch		??	3'-5"	???
5p1	Abut. Hoops		??	10'-6"	???
5p2	Abut. Extension Hoops		24	10'-8"	267
6p3	Abut. Bott. at Piles		??	6'-8"	???
5p4	Abut. Hoops at Ends		8	?'-?"	???
4t1	Under Beams at Abutments		??	5'-4"	???
	Epoxy Reinforcing Total Weight (lbs.)				???

Concrete Placement Diagram

Note: Concrete deck shall be placed in sections and sequences indicated. Alternate procedures for placing deck concrete may be submitted for approval together with a statement of the proposed method and evidence that the Contractor possesses the necessary equipment and facilities to accomplish the required results. For approved alternate procedures the Engineer shall determine if a retarding admixture is required to maintain plasticity of the concrete deck during placement.

Deck, Abut. & Diaph. Quantities

Revised 07-15: Changed Concrete Placement Note to Account for the Possible Addition of a Retarding Admixture to the Concrete.
BTIntegralBridges.dgn - 4520-BTCD - Issued 02-08. This Sheet Re-Issued 11-2023. Sheet Format Update.

Bent Bar Details

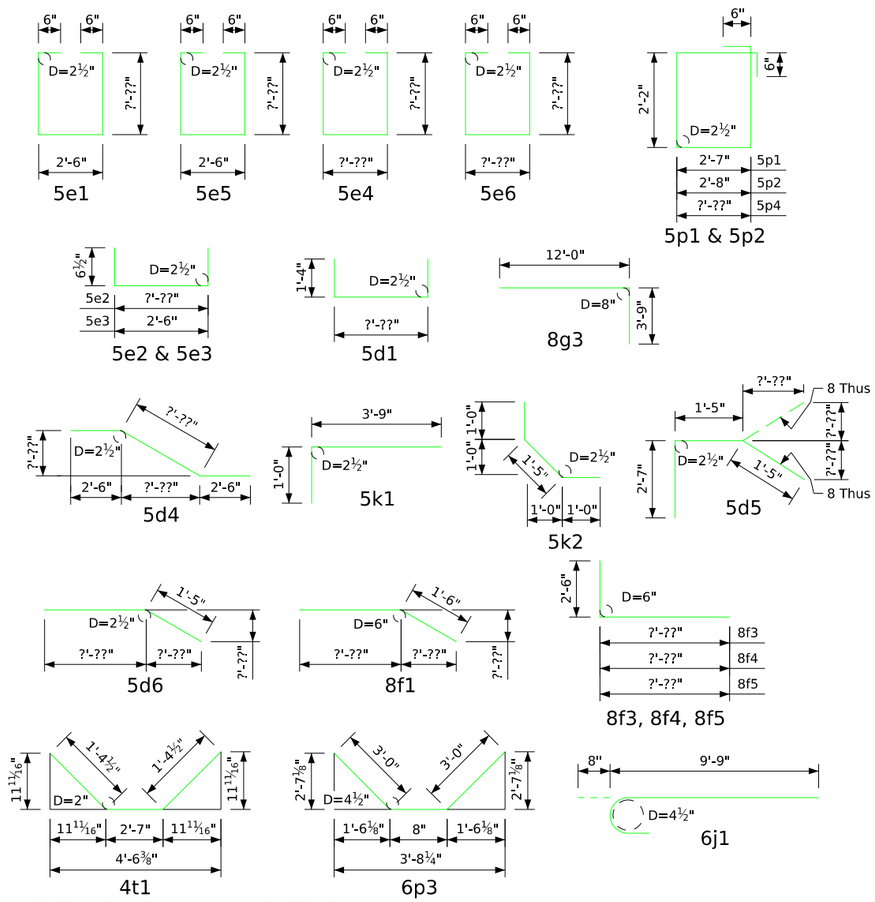

Note: All dimensions are out to out. D= Pin diameter

Non-Coated Reinforcing Steel - Deck, Abutment & Diaphragm

Bar	Location	Shape	No.	Length	Weight
#2	Pile Spiral		??	38'-6"	???
	Spiral Spacers, L⅞" x ⅞" x ⅛" x 0.70		??	1'-10"	???
	Non-Coated Reinforcing Steel Total Weight (lbs.)				???

Concrete Placement Quantities

Location	Quantity
Section 1, Deck & Abut. Diaph.	??.?
Section 2, Deck	??.?
Section 3, Deck & Abut. Diaph.	??.?
Section 4, Deck & Pier Diaph.	??.?
Section 5, Deck & Pier Diaph.	??.?
Total (Cu. Yds.)	??.?

Note: Concrete and Reinforcing Steel Quantities are included on the Summary Quantities Sheet.

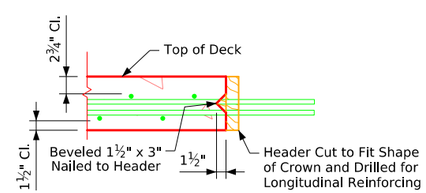

Permissible Transverse Deck Construction Joint

Epoxy Coated Reinforcing Steel - Deck, Abutment & Diaphragm

Bar	Location	Shape	No.	Length	Weight
6a1	Deck Transv. Top		??	??'-?"	???
6a2	Deck Transv. Bott.		??	??'-?"	???
6a3	Deck Transv. Top Ends		??	Varies	???
6a4	Deck Transv. Bott. Ends		??	Varies	???
5b1	Deck Longit. Top & Bott.		??	?'-?"	???
?b2	Deck Longit. Top at Piers		??	?'-?"	???
5d1	Pier Diaph. Ends		??	?'-?"	???
5d2	Pier & Abut. Diaph. Longit.		??	?'-?"	???
5d3	Pier & Abut. Diaph. Longit.		??	?'-?"	???
5d4	Pier Diaph. Longit.		??	?'-?"	???
5d5	Abut. Diaph. Ends		16	5'-5"	90
5d6	Abut. Diaph. Longit. B.F.		20	?'-?"	???
5d7	Paving Notch Longit.		8	?'-?"	???
5d8	Abut. Diaph. Wing Longit.		56	12'-8"	740
5e1	Pier Diaph. Hoops		??	?'-?"	???
5e2	Pier Diaph. Tie Ends		??	?'-?"	???
5e3	Pier Diaph. Ties		??	3'-7"	???
5e4	Pier Diaph. Hoops Ends		??	?'-?"	???
5e5	Pier Diaph. Hoops Expansion Pier		??	?'-?"	???
5e6	Pier Diaph. Hoops Expansion Pier Ends		??	?'-?"	???
8f1	Abut. Footing Longit. Both F.		36	?'-?"	???
8f3	Abut. Extension Longit.		16	?'-?"	???
8f4	Abut. Extension Longit.		8	?'-?"	???
8f5	Abut. Extension Longit.		8	?'-?"	???
8g1	Abut. Vert. Both F.		??	?'-?"	???
8g3	Abut. Diaph. Vert. B.F.		??	15'-9"	???
6g4	Abut. Diaph. Wing Ext. Vert.		56	?'-?"	???
5h2	Abut. to Wing Anchor		24	5'-9"	144
5h5	Abut. to Wing Anchor		8	4'-0"	33
5h7	Abut. to Wing Anchor		12	5'-9"	72
6j1	Top of Deck Transv. (at Rail)		??	10'-5"	???
5k1	Paving Notch		??	4'-9"	???
5k2	Paving Notch		??	3'-5"	???
5p1	Abut. Hoops		??	10'-6"	???
5p2	Abut. Extension Hoops		40	10'-8"	445
6p3	Abut. Bott. at Piles		??	6'-8"	???
5p4	Abut. Hoops at Ends		8	?'-?"	???
4t1	Under Beams at Abutments		??	5'-4"	???
	Epoxy Reinforcing Steel Total Weight (lbs.)				???

Concrete Placement Diagram

Note: Concrete deck shall be placed in sections and sequences indicated. Alternate procedures for placing deck concrete may be submitted for approval together with a statement of the proposed method and evidence that the Contractor possesses the necessary equipment and facilities to accomplish the required results. For approved alternate procedures the Engineer shall determine if a retarding admixture is required to maintain plasticity of the concrete deck during placement.

Deck, Abut. & Diaph. Quantities

Revised 07-15: Changed Concrete Placement Note to Account for the Possible Addition of a Retarding Admixture to the Concrete.
BTIntegralBridges.dgn - 4520-BTE - Issued 02-08. This Sheet Re-Issued 11-2023. Sheet Format Update.

Bent Bar Details

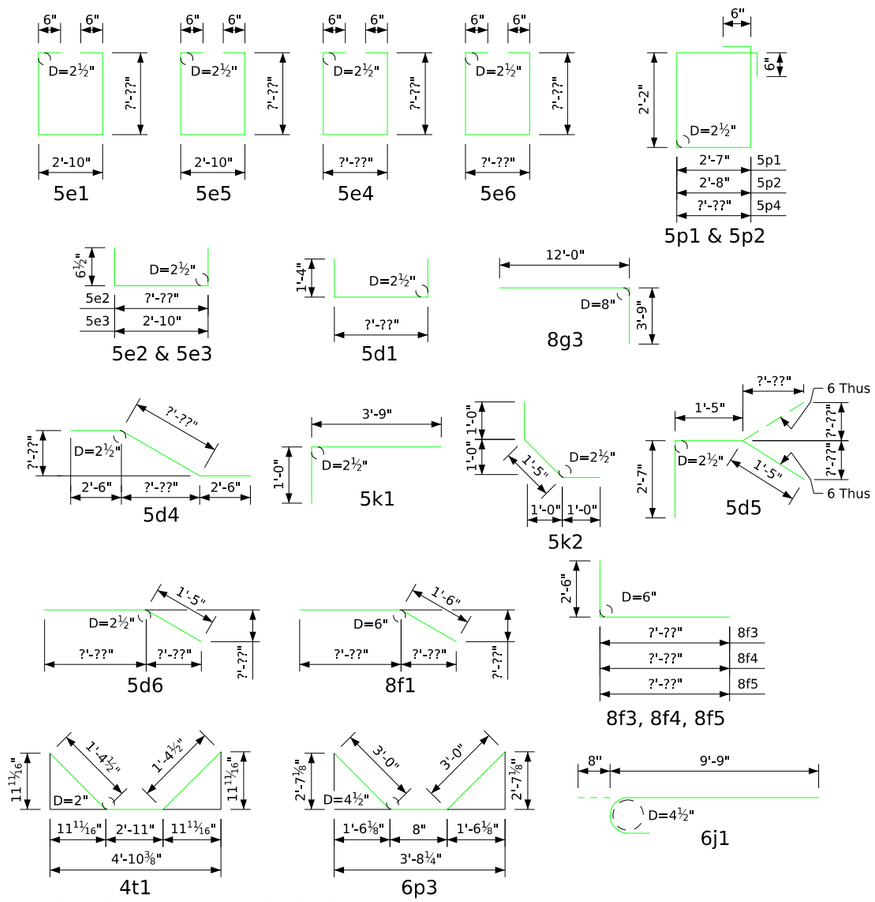

Note: All dimensions are out to out. D= Pin diameter

Non-Coated Reinforcing Steel - Deck, Abutment & Diaphragm

Bar	Location	Shape	No.	Length	Weight
#2	Pile Spiral		??	38'-6"	???
	Spiral Spacers, L⅞" x ⅞" x ⅛" x 0.70		??	1'-10"	???
	Non-Coated Reinforcing Steel Total Weight (lbs.)				???

Concrete Placement Quantities

Location	Quantity
Section 1, Deck & Abut. Diaph.	??.?
Section 2, Deck	??.?
Section 3, Deck & Abut. Diaph.	??.?
Section 4, Deck & Pier Diaph.	??.?
Section 5, Deck & Pier Diaph.	??.?
Total (Cu. Yds.)	??.?

Note: Concrete and Reinforcing Steel Quantities are included on the Summary Quantities Sheet.

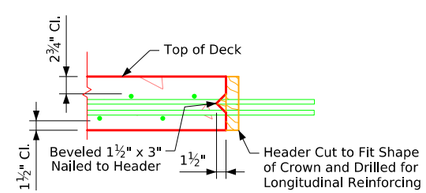

Permissible Transverse Deck Construction Joint

Epoxy Coated Reinforcing Steel - Deck, Abutment & Diaphragm

Bar	Location	Shape	No.	Length	Weight
6a1	Deck Transv. Top		??	??'-?"	???
6a2	Deck Transv. Bott.		??	??'-?"	???
6a3	Deck Transv. Top Ends		??	Varies	???
6a4	Deck Transv. Bott. Ends		??	Varies	???
5b1	Deck Longit. Top & Bott.		??	?'-?"	???
?b2	Deck Longit. Top at Piers		??	?'-?"	???
5d1	Pier Diaph. Ends		??	?'-?"	???
5d2	Pier & Abut. Diaph. Longit.		??	?'-?"	???
5d3	Pier & Abut. Diaph. Longit.		??	?'-?"	???
5d4	Pier Diaph. Longit.		??	?'-?"	???
5d5	Abut. Diaph. Ends		12	5'-5"	68
5d6	Abut. Diaph. Longit. B.F.		16	?'-?"	???
5d7	Paving Notch Longit.		8	?'-?"	???
5d8	Abut. Diaph. Wing Longit.		48	10'-8"	534
5e1	Pier Diaph. Hoops		??	?'-?"	???
5e2	Pier Diaph. Tie Ends		??	?'-?"	???
5e3	Pier Diaph. Ties		??	3'-11"	???
5e4	Pier Diaph. Hoops Ends		??	?'-?"	???
5e5	Pier Diaph. Hoops Expansion Pier		??	?'-?"	???
5e6	Pier Diaph. Hoops Expansion Pier Ends		??	?'-?"	???
8f1	Abut. Footing Longit. Both F.		36	?'-?"	???
8f3	Abut. Extension Longit.		16	?'-?"	???
8f4	Abut. Extension Longit.		8	?'-?"	???
8f5	Abut. Extension Longit.		8	?'-?"	???
8g1	Abut. Vert. Both F.		??	?'-?"	???
8g3	Abut. Diaph. Vert. B.F.		??	15'-9"	???
6g4	Abut. Diaph. Wing Ext. Vert.		40	?'-?"	???
5h2	Abut. to Wing Anchor		24	5'-9"	144
5h5	Abut. to Wing Anchor		8	4'-0"	33
5h7	Abut. to Wing Anchor		12	5'-9"	72
6j1	Top of Deck Transv. (at Rail)		??	10'-5"	???
5k1	Paving Notch		??	4'-9"	???
5k2	Paving Notch		??	3'-5"	???
5p1	Abut. Hoops		??	10'-6"	???
5p2	Abut. Extension Hoops		24	10'-8"	267
6p3	Abut. Bott. at Piles		??	6'-8"	???
5p4	Abut. Hoops at Ends		8	?'-?"	???
4t1	Under Beams at Abutments		??	5'-8"	???
	Epoxy Reinforcing Steel Total Weight (lbs.)				???

Concrete Placement Diagram

Note: Concrete deck shall be placed in sections and sequences indicated. Alternate procedures for placing deck concrete may be submitted for approval together with a statement of the proposed method and evidence that the Contractor possesses the necessary equipment and facilities to accomplish the required results. For approved alternate procedures the Engineer shall determine if a retarding admixture is required to maintain plasticity of the concrete deck during placement.

Deck, Abut. & Diaph. Quantities

Revised 07-15: Changed Concrete Placement Note to Account for the Possible Addition of a Retarding Admixture to the Concrete.
BTIntegralBridges.dgn - 4521-BTCD - Issued 02-08. This Sheet Re-Issued 11-2023. Sheet Format Update.

Bent Bar Details

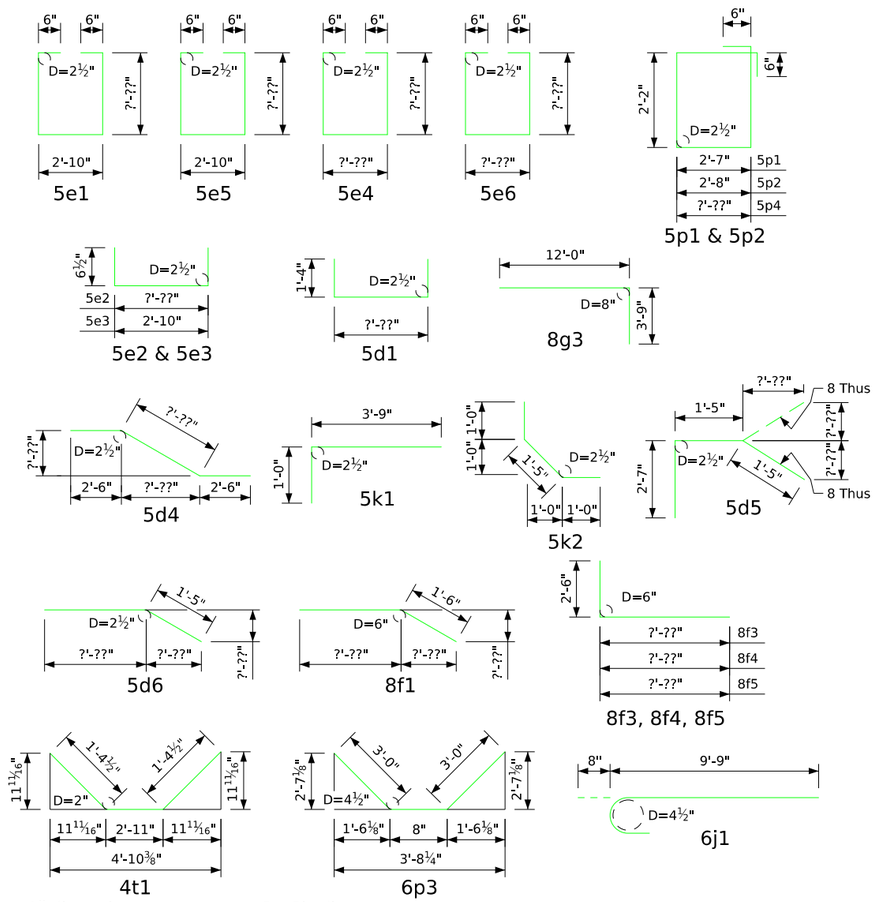

Note: All dimensions are out to out. D= Pin diameter

Non-Coated Reinforcing Steel - Deck, Abutment & Diaphragm

Bar	Location	Shape	No.	Length	Weight
#2	Pile Spiral		??	38'-6"	???
	Spiral Spacers, L⅞" x ⅞" x ⅛" x 0.70		??	1'-10"	???
	Non-Coated Reinforcing Steel Total Weight (lbs.)				???

Concrete Placement Quantities

Location	Quantity
Section 1, Deck & Abut. Diaph.	??.?
Section 2, Deck	??.?
Section 3, Deck & Abut. Diaph.	??.?
Section 4, Deck & Pier Diaph.	??.?
Section 5, Deck & Pier Diaph.	??.?
Total (Cu. Yds.)	??.?

Note: Concrete and Reinforcing Steel Quantities are included on the Summary Quantities Sheet.

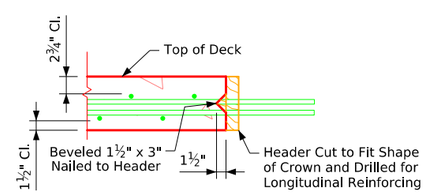

Permissible Transverse Deck Construction Joint

Epoxy Coated Reinforcing Steel - Deck, Abutment & Diaphragm

Bar	Location	Shape	No.	Length	Weight
6a1	Deck Transv. Top		??	??'-?"	???
6a2	Deck Transv. Bott.		??	??'-?"	???
6a3	Deck Transv. Top Ends		??	Varies	???
6a4	Deck Transv. Bott. Ends		??	Varies	???
5b1	Deck Longit. Top & Bott.		??	?'-?"	???
?b2	Deck Longit. Top at Piers		??	?'-?"	???
5d1	Pier Diaph. Ends		??	?'-?"	???
5d2	Pier & Abut. Diaph. Longit.		??	?'-?"	???
5d3	Pier & Abut. Diaph. Longit.		??	?'-?"	???
5d4	Pier Diaph. Longit.		??	?'-?"	???
5d5	Abut. Diaph. Ends		16	5'-5"	90
5d6	Abut. Diaph. Longit. B.F.		20	?'-?"	???
5d7	Paving Notch Longit.		8	?'-?"	???
5d8	Abut. Diaph. Wing Longit.		56	12'-8"	740
5e1	Pier Diaph. Hoops		??	?'-?"	???
5e2	Pier Diaph. Tie Ends		??	?'-?"	???
5e3	Pier Diaph. Ties		??	3'-11"	???
5e4	Pier Diaph. Hoops Ends		??	?'-?"	???
5e5	Pier Diaph. Hoops Expansion Pier		??	?'-?"	???
5e6	Pier Diaph. Hoops Expansion Pier Ends		??	?'-?"	???
8f1	Abut. Footing Longit. Both F.		36	?'-?"	???
8f3	Abut. Extension Longit.		16	?'-?"	???
8f4	Abut. Extension Longit.		8	?'-?"	???
8f5	Abut. Extension Longit.		8	?'-?"	???
8g1	Abut. Vert. Both F.		??	?'-?"	???
8g3	Abut. Diaph. Vert. B.F.		??	15'-9"	???
6g4	Abut. Diaph. Wing Ext. Vert.		56	?'-?"	???
5h2	Abut. to Wing Anchor		24	5'-9"	144
5h5	Abut. to Wing Anchor		8	4'-0"	33
5h7	Abut. to Wing Anchor		12	5'-9"	72
6j1	Top of Deck Transv. (at Rail)		??	10'-5"	???
5k1	Paving Notch		??	4'-9"	???
5k2	Paving Notch		??	3'-5"	???
5p1	Abut. Hoops		??	10'-6"	???
5p2	Abut. Extension Hoops		40	10'-8"	445
6p3	Abut. Bott. at Piles		??	6'-8"	???
5p4	Abut. Hoops at Ends		8	?'-?"	???
4t1	Under Beams at Abutments		??	5'-8"	???
	Epoxy Reinforcing Steel Total Weight (lbs.)				???

Concrete Placement Diagram

Note: Concrete deck shall be placed in sections and sequences indicated. Alternate procedures for placing deck concrete may be submitted for approval together with a statement of the proposed method and evidence that the Contractor possesses the necessary equipment and facilities to accomplish the required results. For approved alternate procedures the Engineer shall determine if a retarding admixture is required to maintain plasticity of the concrete deck during placement.

Deck, Abut. & Diaph. Quantities

Revised 07-15: Changed Concrete Placement Note to Account for the Possible Addition of a Retarding Admixture to the Concrete.
BTIntegralBridges.dgn - 4521-BTE - Issued 02-08. This Sheet Re-Issued 11-2023. Sheet Format Update.